Course: Digital Audio Signal Processing

Foundations of Acoustic

Aurelio Uncini

Dept. of Information Engineering, Electronincs and Telecommunications

SAPIENZA
UNIVERSITÀ DI ROMA

intelligent signal processing
and multimedia lab

Premise

- By sound, we mean a mechanical phenomenon caused by a perturbation of a transmission medium (usually the air) that has characteristics such as to be perceived by the human ear.

- The sound in a fluid is essentially characterized by a time-varying change in density associated with a time-varying change in the pressure, temperature and position of the fluid particles (thought as the infinitesimal volume of the fluid itself).

- The generation of a sound is generally attributed to the vibration of solid objects and the sound itself is often referred to as “air vibration”. The words “sound” and “vibration” are, in fact, commonly connected to each other. In musical instruments, for example, some sound generators are vibrating strings as in piano, guitar, violin, etc; vibration of bars like in the xylophone, vibraphone; vibration of membranes as in drums and banjo; vibration columns of air in pipes as in pipe organ, brass, wood, etc.

Simple Oscillating System

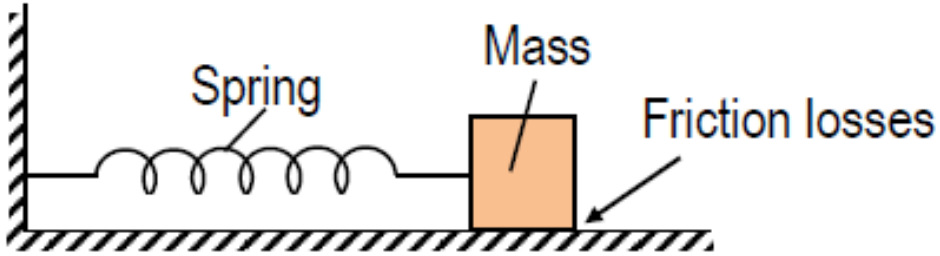

Simple oscillating system.
a) Massspring-friction system.
b) Circuit representation of vibrating system in one dimensions

m is the mass,

K is the elastic constant,

R is the mechanical resistance coefficient that model the friction.

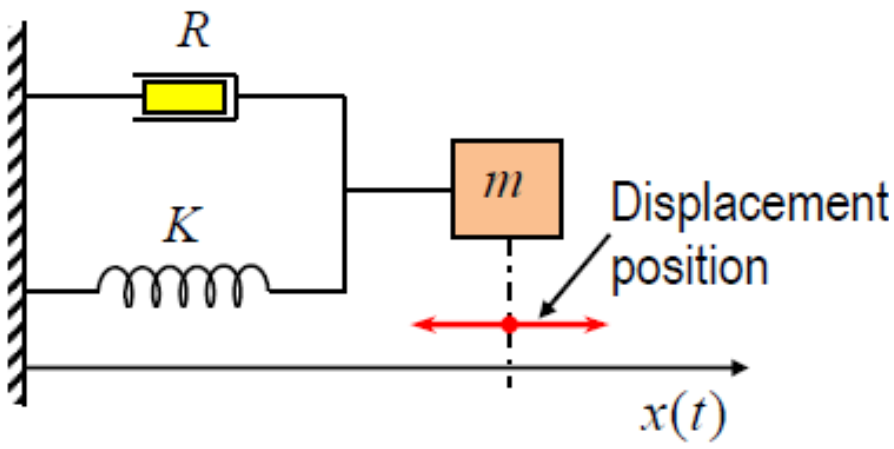

If the system is stressed with a force, indicated as F_k, it is obtained a displacement $x(t)$ proportionally to it. Modeling the motion in one dimension, can be obtained by considering the balance between forces due to Newton's second law. That is

$$\sum_k F_k = m \cdot \ddot{x}(t) \tag{1.1}$$

where the quantity $\ddot{x}(t) \equiv \frac{\partial^2 x(t)}{\partial t^2} = a(t)$, represents the acceleration[1]. In this case, the forces involved in the equilibrium of the above dynamic system are: the force of the spring proportional to the displacement $F_1 = -Kx(t)$; and the friction proportional to the speed of motion $F_2 = -R\dot{x}(t)$. The equation of motion can be determined by replacing in Eqn. (1.1) the *constitutive relations* of the spring and of the damper obtaining the homogeneous linear *ordinary differential equation* (ODE) of the type

$$m\ddot{x}(t) + R\dot{x}(t) + Kx = 0. \tag{1.2}$$

Simple Harmonic Motion

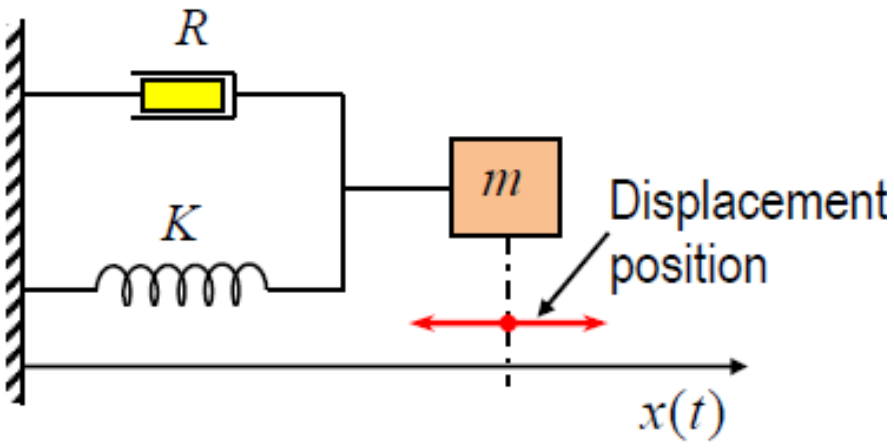

For $R = 0$

Definition 1.1. A *simple harmonic motion* is a special type of periodic motion or oscillation motion where the restoring force is directly proportional to the displacement and acts in the direction opposite to that of displacement.

In this case there is a *simple harmonic motion* characterized by the following homogeneous differential equation

$$m\ddot{x}(t) + Kx(t) = 0. \tag{1.3}$$

Definition 1.2. The constant $\omega_0 = \sqrt{K/m}$ is defiend as *resonance pulsation*, or similarly the resonance frequency is defiend as $f_0 = \frac{1}{2\pi}\sqrt{\frac{K}{m}}$.

So, the Eqn. (1.3) can be rewritten as

$$\ddot{x}(t) + \omega_0^2 x(t) = 0 \tag{1.4}$$

which represents the differential equation of simple harmonic motion. Thus, according with Definiton 1.1, from the theory of differential equations, the Eqn. (1.4) admits a solution $x(t)$ of the type

$$x(t) = A_1 \cos\omega_0 t + A_2 \sin\omega_0 t \tag{1.5}$$

where A_1 and A_2 are two arbitrary constants to be determined based on the value of the initial conditions (i.c.) $x(0)$ and $\dot{x}(0)$ of Eqn. (1.4). In addition, observe that the solution in Eqn. (1.5) is very often written as

$$x(t) = A\cos(\omega_0 t + \phi). \tag{1.6}$$

The constant ω_0 represents the *natural pulsation* or *resonance pulsation* of the system. The *natural frequency* f_0 of the oscillating system is therefore equal to $f_0 = (1/2\pi)\sqrt{K/m}$. The amplitude A of the oscillation is equal to $A = \sqrt{A_1^2 + A_2^2}$, and the phase equal to $\phi = \tan^{-1}(A_2/A_1)$.

1.2.1.1 Velocity and Acceleration

Differentiating the Eqn. (1.6) with respect to time, we obtain the velocity $v(t)$

$$v(t) = \dot{x}(t) = -\omega_0 A \sin(\omega_0 t + \phi) \tag{1.7}$$

by differentiating again, we obtain the acceleration $a(t)$

$$a(t) = \ddot{x}(t) = -\omega_0^2 A \cos(\omega_0 t + \phi) \tag{1.8}$$

drawn in Fig. 1.2. Note that the velocity is out of phase by $\pi/2$ radians and the acceleration of π radians.

From Eqn.s (1.7) and (1.8), note that: 1) at the same amplitude A, velocity and acceleration are greater as the frequency is higher; 2) $x(t)$ and $a(t)$ are in phase opposition, while $v(t)$ is in quadrature with them.

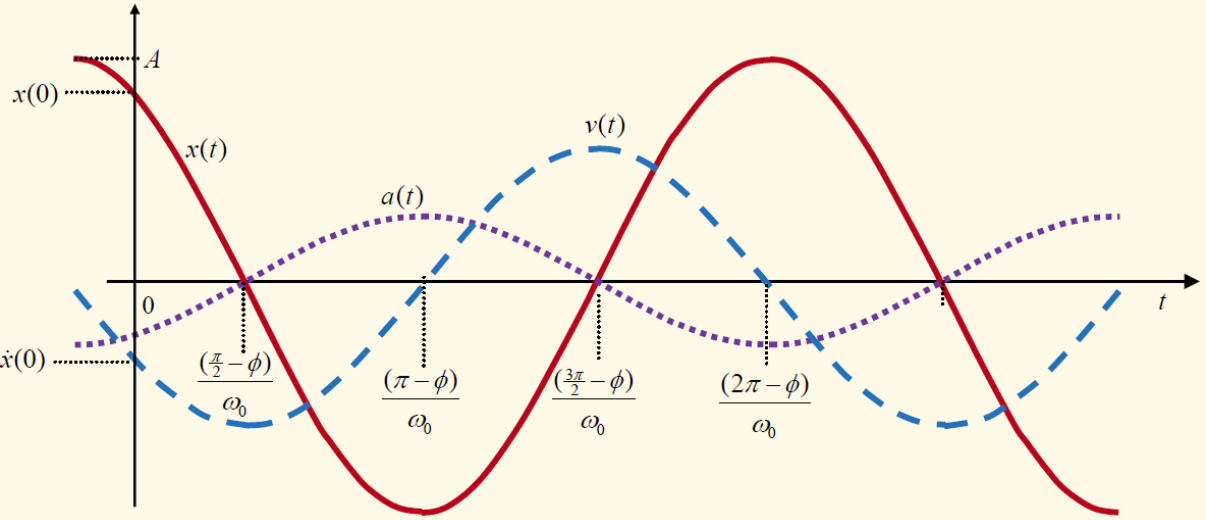

1.2.1.2 Potential and Kinetic Energy

Due to the phase shift between $x(t)$ and $v(t)$, the kinetic energy E_k of the system is maximum when the potential energy E_p is zero (and vice versa)

$$E_k = \frac{1}{2}mv^2, \qquad E_p = \int_0^x Kx dx.$$

The internal energy of the system is given for each t by the sum $E_k + E_p$, that is

$$E = \frac{1}{2}mv^2 + \int_0^x Kx dx = \frac{1}{2}m\omega^2\cos^2(\omega t+\phi) + \frac{1}{2}KA^2\omega^2\sin^2(\omega t+\phi)$$

where $K = m\omega^2$; so, we have that

$$E = E_p + E_k = \frac{1}{2}KA^2 = \frac{1}{2}m\omega_0^2A^2 = \frac{1}{2}mU^2 \tag{1.9}$$

where U represents the maximum speed. In a loss-free system, the energy is constant and is equal to the maximum potential energy (at maximum deviation) or maximum kinetic energy (at the central point).

Moreover, to characterize the oscillator motions we often refer to the *effective quantities* or *root mean squares* (RMS), denoted as x_{eff} or x_{RMS}, defined as the following scalar quantity

$$x_{RMS} = \lim_{T\to\infty}\sqrt{\frac{1}{T}\int_0^T |x(t)|^2 dt} \tag{1.10}$$

and for a periodic signal is equal to the RMS of one period of the signal. Thus for sinusoidal quantity we have that $x_{RMS} = A/\sqrt{2}$ where is the amplitude of the oscillation.

Remark 1.1. In physical modeling, the mass m and the spring K are considered as concentrated in single point. The model is denoted as: *lumped parameters model* that, under certain assumptions, approximate the behaviour of the distributed system. It is useful in electrical, mechanical, acoustics, ..., systems. In particular the mass m can be considered as an elementary sound source, which transmits the motion to the particles of the medium in which it is in contact.

Damped Harmonic Oscillating System

Solution for *R > 0*

In the case of real system, drag loss are no longer negligible ($R > 0$). The differential equation (1.2), considering the substitutions $\alpha = R/2m$ and $\omega_0^2 = K/m$, can be rewritten as

$$\ddot{x}(t) + 2\alpha\dot{x}(t) + \omega_0^2 x(t) = 0. \tag{1.11}$$

$$\gamma^2 + 2\alpha\gamma + \omega_0^2 = 0 \tag{1.12}$$

where the variable γ is defined as a *complex frequency*. The roots γ_1 and γ_2 of (1.12) are computed as

$$\gamma_{1,2} = -\alpha \pm \sqrt{\alpha^2 - \omega_0^2} = -\alpha \pm j\sqrt{\omega_0^2 - \alpha^2} = -\alpha \pm j\omega_d \tag{1.13}$$

where $\omega_d = \sqrt{\omega_0^2 - \alpha^2}$, represents the *natural pulsation* of the damped oscillation (which, due to due to the presence of friction, is lower than the non-damped resonance pulsation $\omega_0 = \sqrt{K/m}$). The solutions (1.13) can be: 1) real and distinct; 2) conjugate complexes, and 3) real coincident. For each of these cases there will be a solution that characterizes a certain physical behavior.

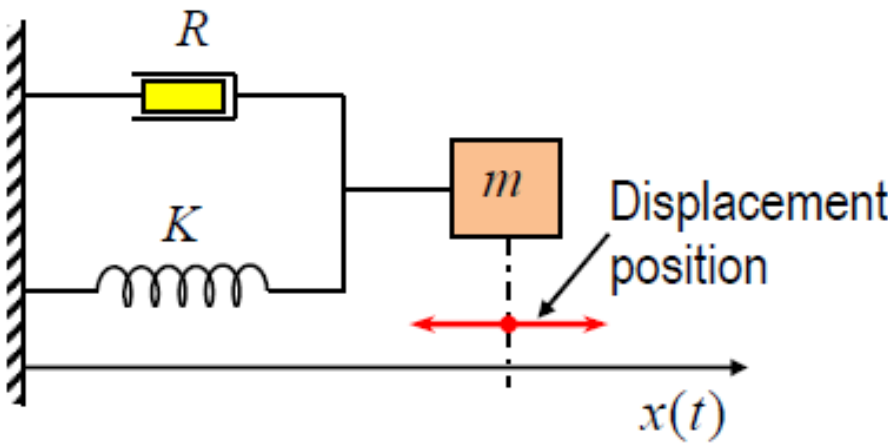

$$x(t) = A_1 e^{\lambda t} + A_2 t e^{\lambda t}$$

$$A_1 = x(0)$$
$$\gamma A_1 + A_2 = \ddot{x}(0)$$

$$A_1 + A_2 = x(0)$$
$$\gamma_1 A_1 + \gamma_1^* A_2 = \dot{x}(0).$$

$$\begin{aligned} x(t) &= |A_1| e^{j\phi} e^{(-\alpha + j\omega_d)t} + |A_1| e^{-j\phi} e^{(-\alpha - j\omega_d)t} \\ &= |A_1| e^{-\alpha t} \left(e^{j(\omega_d t + \phi)} + e^{-j(\omega_d t + \phi)} \right) \end{aligned}$$

so, from the Euler formula, it is worth that

$$x(t) = A e^{-\alpha t} \cos(\omega_d t + \phi)$$

Damped Harmonic Oscillating System

$$x(t) = Ae^{-\alpha t}\cos(\omega_d t + \phi)$$

1.2.2.4 Time Constant τ

An important measure of damping is the time needed for the amplitude to attenuate by a factor equal to $1/e$ (for which $e^{-\alpha t} = e^{-1}$). This time, denoted as τ, is called in various ways according to the application fields: *time constant*, *decay constant*, *life time*, *characteristic time*; so, for the Eqn. (1.20), we have that

$$\tau = \frac{1}{\alpha} = \frac{2m}{R}$$

and in the following, τ will be called a *time constant*.

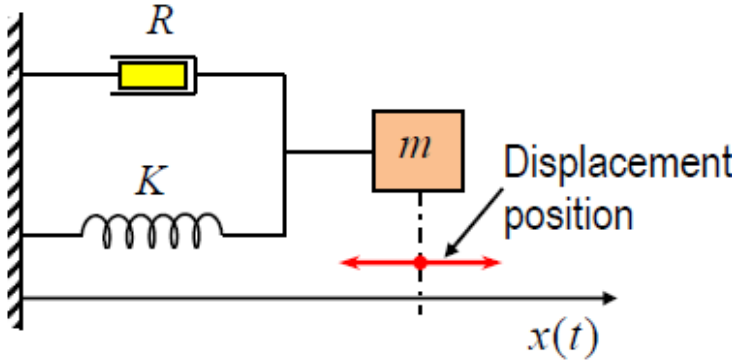

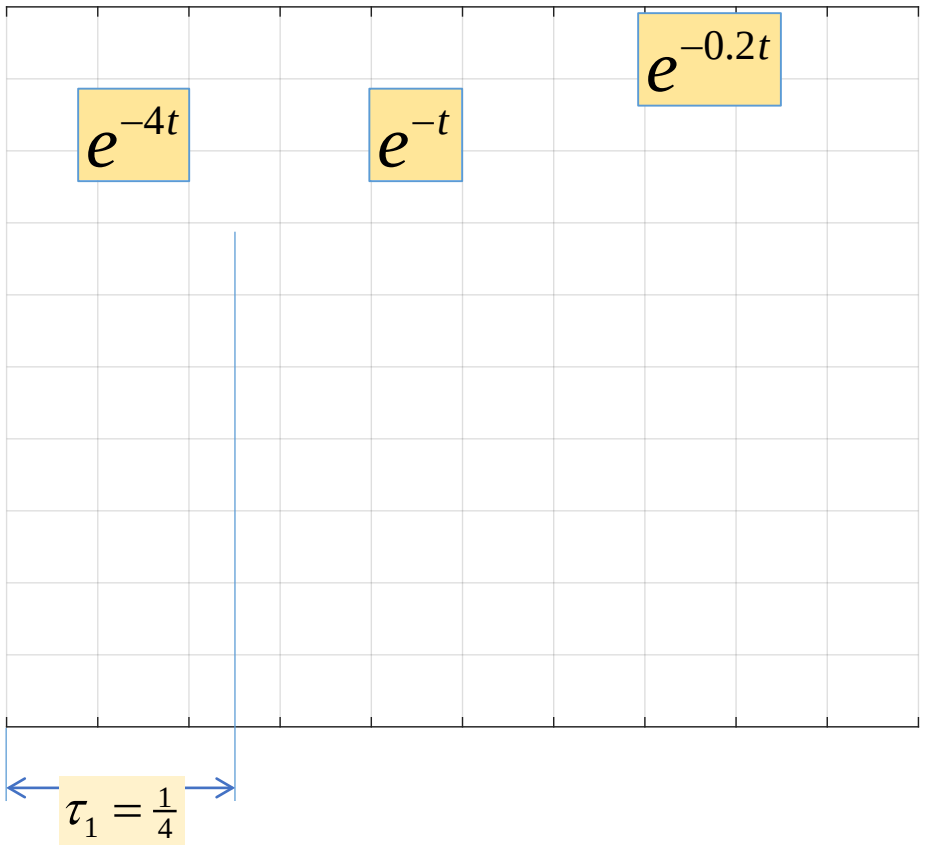

Simple Harmonic Motion

```
%-------------------------------------------------------------------------
%
%   Damped linear oscillator for various values of the time constant \tau
%
% ------------------------------------------------------------------------
% A. Uncini, "Digital Audio and Acoustic Processing Fundamentals", DRAFT
%
%   Copyright 2020 - A. Uncini
%   DIET Dpt - University of Rome 'La Sapienza' - Italy
%   $Revision: 1.0$  $Date: 2020/03/31$
%-------------------------------------------------------------------------
clear all; close all;
rng(19);       % Set seed for random number generation
Ts = 1/1000;   % Sampling frequency
t = 0:Ts:1;
N = length(t);

w0   = 3.25*2*pi;
alfa = [0.0  2   4];

y0 = 1;
K = length(alfa);
kk=0;
for k=1:K
    wd   = sqrt( w0^2 - alfa(k)^2 );
    phi  = -atan( alfa(k)/wd );
    kk=kk+2;
    for i=1:N
        y(kk-1,i) = exp(-alfa(k)*t(i)) * cos( wd*t(i) + phi );
        y(kk,i)   = exp(-alfa(k)*t(i)) ;
    end
end
```

```
%%%%%%%%%%% Plot %%%%%%%%%%%
```

Damped Harmonic Oscillating System

1.2.2.5 Quality Factor Q and Damping Ratio ζ

Very often to characterize the behavior of a damped oscillator, we used the quality factor Q, or factor Q, defined as the ratio between the spring force Kx_0 and the damping force $R\omega_0 x_0$

$$Q = \frac{Kx_0}{R\omega_0 x_0} = \frac{K}{R\omega_0} = \frac{\omega_0}{2\alpha}. \tag{1.24}$$

This seems to be due, in addition to historical and customary reasons, to the fact that the Q-factor allows an immediate definition in the frequency domain. In fact, for resonant circuits, as we will see later on (Eqn. (1.42)), it is worth $Q = \Delta f / f$

Remark 1.3. However, it is useful to note that in other areas, such as automatic controls, instead of the Q-factor is more common the use of the *damping ratio* ζ defined as

$$\zeta = \frac{\alpha}{\omega_0} = \frac{1}{2Q} \tag{1.25}$$

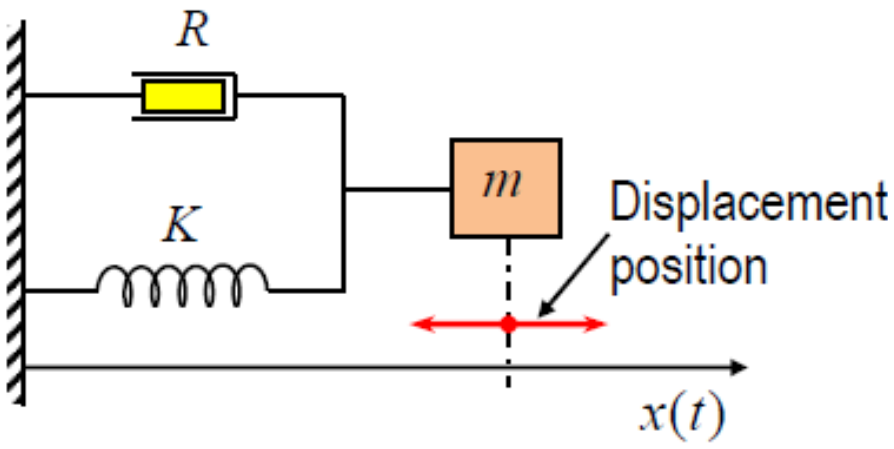

Damped Harmonic Oscillating System

1.2.3 Phasor Related to Quantities x, v and a

By *phasor* or *complex amplitude* associated with the sinusoidal quantity $x(t) = X\cos(\omega t + \phi)$, we mean a complex number, indicated as $\mathbf{X}$, such that

$$x(t) = \mathrm{Re}\left[\mathbf{X}e^{j\omega t}\right].$$

So, the phasor $\mathbf{X}$ is then defined as

$$\mathbf{X} = Xe^{j\phi} \tag{1.26}$$

therefore in the phasor is contained only information on the amplitude and phase, and not the information on the pulsation. In addition, the quantity

$$\bar{x}(t) = \mathbf{X}e^{j\omega t} \quad \Leftrightarrow \quad x(t) = \mathrm{Re}\left[\bar{x}(t)\right] \tag{1.27}$$

takes the name of *rotating vector* or *complex displacement* associated with the quantity $x(t) = X\cos(\omega t + \phi)$. The rotating vector $\bar{x}(t)$ is typically written as $\bar{x}$ (i.e. implying the time index (t)).

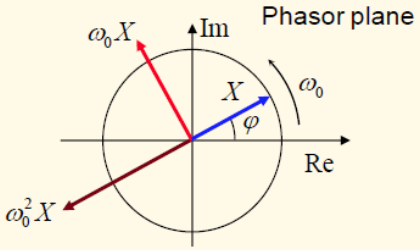

Fig. 1.4 Quantities of the linear oscillator described as *rotating vectors* in the plane of the phasors.

Therefore, the velocity and the complex acceleration can be, respectively, written as

$$\bar{v} = j\omega_0\mathbf{X}e^{j\omega_0 t} = j\omega_0\bar{x} \tag{1.28}$$

and

$$\bar{a} = -\omega_0^2\mathbf{X}e^{j\omega_0 t} = -\omega_0^2\bar{x}. \tag{1.29}$$

Graphically thse vectors can represent the "motion" indicated in Fig. 1.4 in the *phasor plane*.So, we observe that velocity $\bar{v}$ increases with frequency, while acceleration $\bar{a}$ with its square.

Forced Oscillating System

$$m\ddot{x}(t) + R\dot{x}(t) + Kx(t) = f(t)$$

1.3.1 Transfer Function and Frequency Response

A linear system can be represented by the *Laplace Transform* (or L-transform). So, considering the L-transform of Eqn. (1.30) we can write[2]

$$ms^2X(s) + RsX(s) + KX(s) = F(s). \tag{1.31}$$

The *transfer function* (TF), defined as the ratio between the L-transform of the output variable and the L-transform of the driving variable, can be written as

$$H(s) = \frac{X(s)}{F(s)} = \frac{1/K}{1 + \frac{R}{K}s + \frac{m}{K}s^2}. \tag{1.32}$$

$$H(s) = \frac{1/K}{1 + \frac{R}{K}s + \frac{m}{K}s^2} = \frac{G}{1 + \frac{s}{\omega_0 Q} + \frac{s^2}{\omega_0^2}}$$

$$h(t) = L^{-1}\left[\frac{G}{1 + \frac{s}{\omega_0 Q} + \frac{s^2}{\omega_0^2}}\right] = \frac{G}{\omega_d}e^{-\alpha t}\sin(\omega_d t), \quad \omega_d = \omega_0\sqrt{1-(1/2Q)^2}.$$

where for high Q values, we have that $\omega_d \approx \omega_0$.

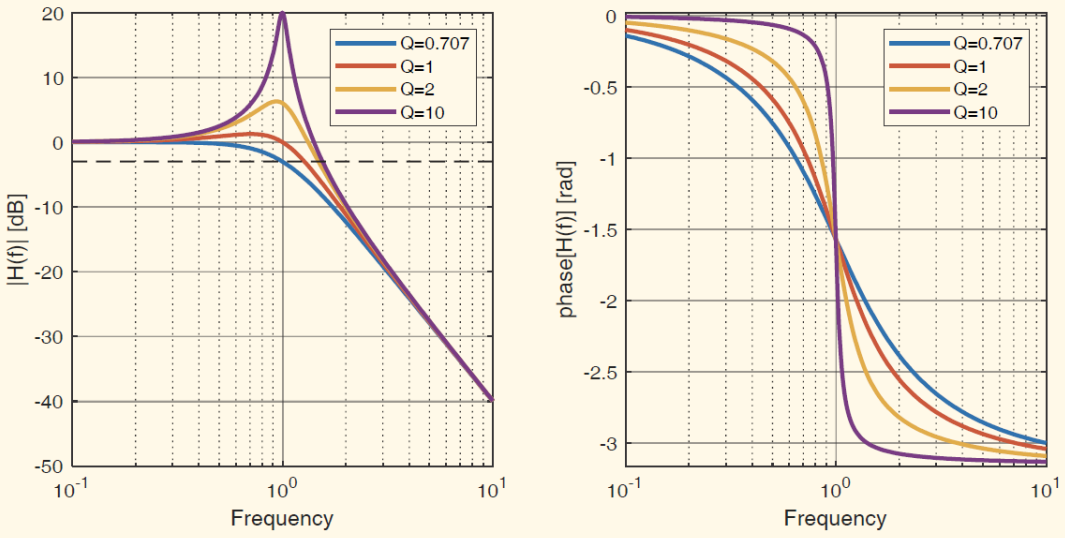

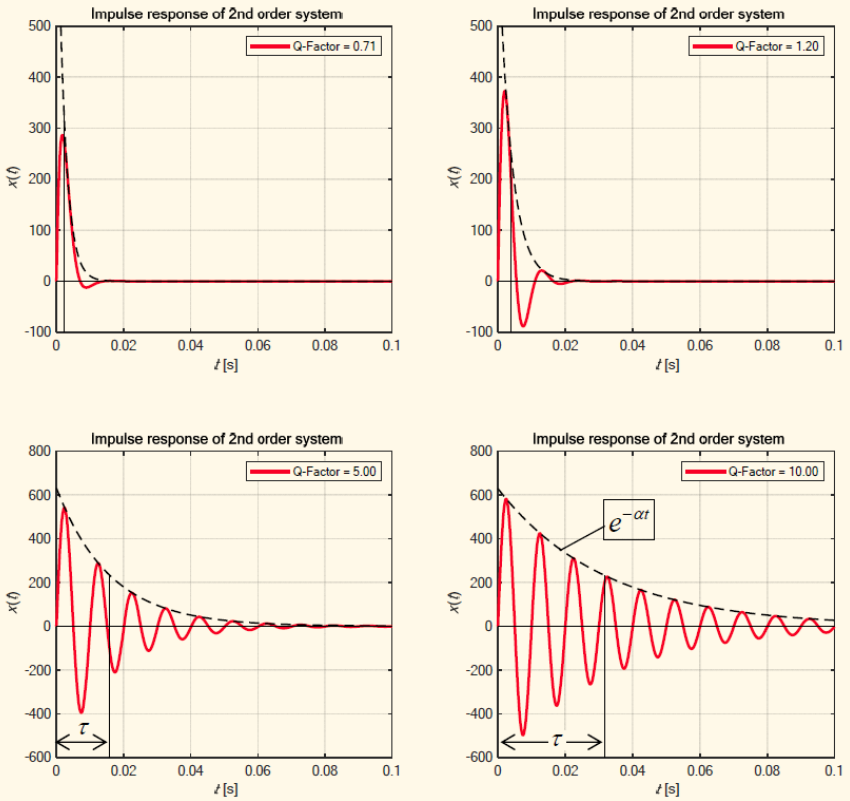

Forced Oscillating System

1.3.1.1 Force vs Velocity Transfer Function

Finally, as seen previously, the mechanical system can be characterized by "through" and "at-the-end" quantities, i.e. force and velocity. Indicating with $V(s) = sX(s)$ the L-transform of the velocity, the transfer function between velocity and force becomes

$$H_v(s) = \frac{V(s)}{F(s)} = \frac{s\,(1/K)}{1 + \frac{R}{K}s + \frac{m}{K}s^2}. \tag{1.35}$$

Resonant circuit TF

Remark 1.4. Note that the TF in Eqn. (1.35), has a zero in the origin and two poles in the denominator and, as we will see also in in §1.4.2, it is the typical one of the so called *resonant circuit*.

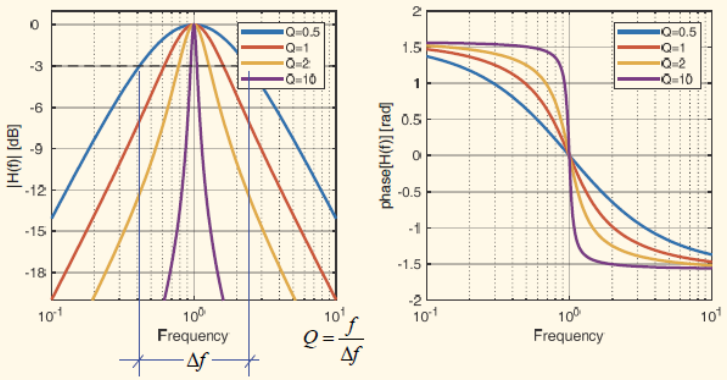

Forced Oscillating System

1.3.1.2 Bandwidth at −3dB

Considering the resonance TF in Eqn. (1.35) for $\Omega_0 = \sqrt{K/m}$, $Q = K/\Omega_0 R$, and for $s = j\Omega$, to better study its frequency response,it is more convenient to express the TF (1.35) as

$$H(j\Omega) = \frac{1}{1 + jQ\left(\frac{\Omega}{\Omega_0} - \frac{\Omega_0}{\Omega}\right)}.$$

Considering the amplitude response for $f = \Omega/2\pi$ it is easy to verify that

$$|H(f)| = \frac{1}{\sqrt{1 + Q^2\left(\frac{f}{f_0} - \frac{f_0}{f}\right)^2}} \tag{1.36}$$

where the Q-factor, as is known, provides a direct measurement of the bell-shape frequency response. The term f_0 represents the maximum frequency of the bell and is also called *resonance frequency*.

By definition, the bandwidth at −3 dB (see Fig. 1.8) corresponds to the frequencies for which the TF module is equal to $1/\sqrt{2}$, which corresponds to half power. These frequencies, defined as cutoff frequencies, can be easily calculated by imposing this value on the module; i.e.we get

$$\frac{1}{\sqrt{1 + Q^2\left(\frac{f}{f_0} - \frac{f_0}{f}\right)^2}} = \frac{1}{\sqrt{2}} \tag{1.37}$$

resolving with respect to f, the filter cutoff frequency values can be determined as

$$f_1 = \frac{f_0}{2Q}\left(\sqrt{1 + 4Q^2} - 1\right) \quad \triangleq \quad \text{low-cut frequency} \tag{1.38}$$

$$f_2 = \frac{f_0}{2Q}\left(\sqrt{1 + 4Q^2} + 1\right) \quad \triangleq \quad \text{high-cut frequency.} \tag{1.39}$$

From the previous expressions it is easy to verify that the f_0 corresponds to the geometric mean of the cutoff frequencies

$$f_0 = \sqrt{f_1 f_2} \quad \triangleq \quad \text{resonance frequency.} \tag{1.40}$$

Combining the expressions (1.38) and (1.39) we have that

$$f_2 - f_1 = \frac{f_0}{Q} \tag{1.41}$$

so, it is usual to define the value of the Q-factor as

$$Q = \frac{f_0}{\Delta f} \tag{1.42}$$

where, for Eqn. (1.37), the quantity $\Delta f = f_2 - f_1$ is defined *filter bandwidth* at −3 dB[4].

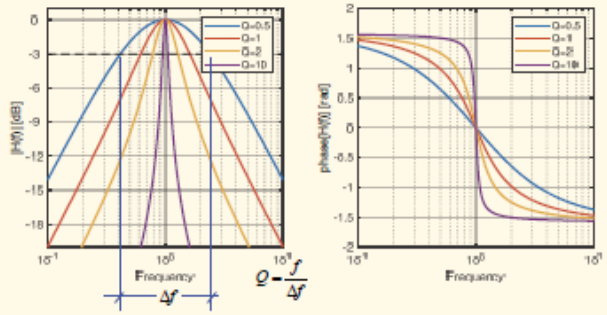

Fig. 1.8 Frequency and phase response of a resonant oscillator (or circuit) for different values of the Q-factor.

Remark 1.5. Note that the definition of Q in (1.42) does not depend on the components of the oscillator (K, R), so its use is much more convenient as, for example, in defining the design specifications for analogue or digital filters used in the audio sector.

Forced Oscillating System

1.3.2 Transient and Steady-State Response

Consider the oscillating system modeled with Eqn. (1.30) excited by an external force with a sinusoidal waveform of the type

$$f(t) = F\cos(\omega t + \phi), \quad for \quad t \geq 0. \tag{1.43}$$

In the case of zero initial conditions, it is known from the theory of differential equations that the solution of the Eqn. (1.30) can be expressed as the sum of two parts

$$x(t) = x_t(t) + x_p(t) \qquad \Leftrightarrow \qquad X(s) = X_t(s) + X_p(s). \tag{1.44}$$

The part $x_t(t)$ is called the transitory response of the system that runs out for; while $x_p(t)$ is called a permanent response or a steady-state response that predominates over time.

To obtain the solution of a sinusoidal steady-state, it is better to write the solution in the Laplace domain as

$$X(s) = H(s)F(s). \tag{1.45}$$

So, the $X(s)$ can be characterized by a pair of complex conjugate poles deriving from the sinusoidal excitation function (1.43). Developing in partial fractions the $X(s)$, there is a development of the type

$$X(s) = X_t(s) + \frac{R}{s - j\omega} + \frac{R^*}{s + j\omega} \tag{1.46}$$

where the part $X_t(s)$ is the transitory one as it relates to the poles of $H(s)$ which, due to the stability condition, will have a real part less than zero. It therefore appears that the steady-state response is sinusoidal and can be written as

$$x_p(t) = L^{-1}\left[\frac{R}{s - j\omega} + \frac{R^*}{s + j\omega}\right] = A_1\cos(\omega t + \phi), \qquad t \geq 0. \tag{1.47}$$

1.3.3 Sinusoidal Steady-state Response and Impedance

To obtain the only sinusoidal steady-state response, we can proceed by writing the equation of motion in the *phasor domain* as

$$\mathbf{X} = H(s)|_{s=j\omega}\,\mathbf{F} = \frac{\mathbf{F}}{K - \omega^2 m + j\omega R} = \frac{\mathbf{F}/m}{\omega_0^2 - \omega^2 + j\omega 2\alpha} \tag{1.48}$$

where $\omega^2 = K/m$ and $\alpha = R/2m$. Recalling the link between the phasor of a sinusoidal quantity and the phasor of its derivative with respect to time[5], it results $\mathbf{V} = j\omega\mathbf{X}$

$$\mathbf{V} = \dot{\mathbf{X}} = \frac{j\omega\mathbf{F}/m}{\omega_0^2 - \omega^2 + j\omega 2\alpha} = \frac{\omega\mathbf{F}/m}{\omega 2\alpha - j\left(\omega^2 - \omega_0^2\right)}. \tag{1.49}$$

The *mechanical impedance* $\mathbf{Z}$ in the phasor-domain, defined as the ratio between the force and the velocity phasors, is therefore defined as

$$\mathbf{Z} = \frac{\mathbf{F}}{\mathbf{V}} = R + j(\omega m - K/\omega) = R + jX_m \tag{1.50}$$

where $X_m = \omega m - K/\omega$ represents mechanical reactance.

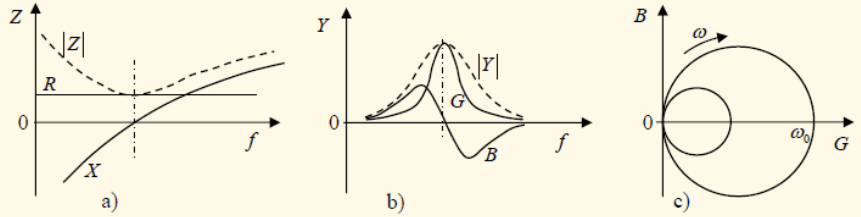

Fig. 1.9 Real and imaginary parts of the mechanical impedance and admittance of the harmonic oscillator: a) mechanical impedance; b) mechanical admittance or mobility; c) parametric frequency representation of the imaginary part as a function of the real part of the admittance (Nyquist diagram).

The steady-state displacement law, according to Eqn. (1.47), can be expressed as a function of the mechanical impedance such as

$$x(t) = \mathrm{Re}\left[\frac{\mathbf{F}}{j\omega\mathbf{Z}}e^{j\omega t}\right] = \frac{F}{\omega Z}\sin(\omega t + \phi) \tag{1.51}$$

where Z is the module of the complex impedance.

Forced Oscillating System

1.3.4 Calculation of Complete Response

In order to obtain the complete transient and steady-state response, the Eqn. (1.46) should be explicitly calculated. In these cases it can be shown that the displacement takes the form

$$x(t) = Ae^{-\alpha t}\cos(\omega_d t + \phi) + \frac{\mathrm{F}}{\omega Z}\sin(\omega t + \phi), \qquad t \geq 0 \tag{1.52}$$

where the arbitrary constants A and ϕ depend on the system initial conditions.

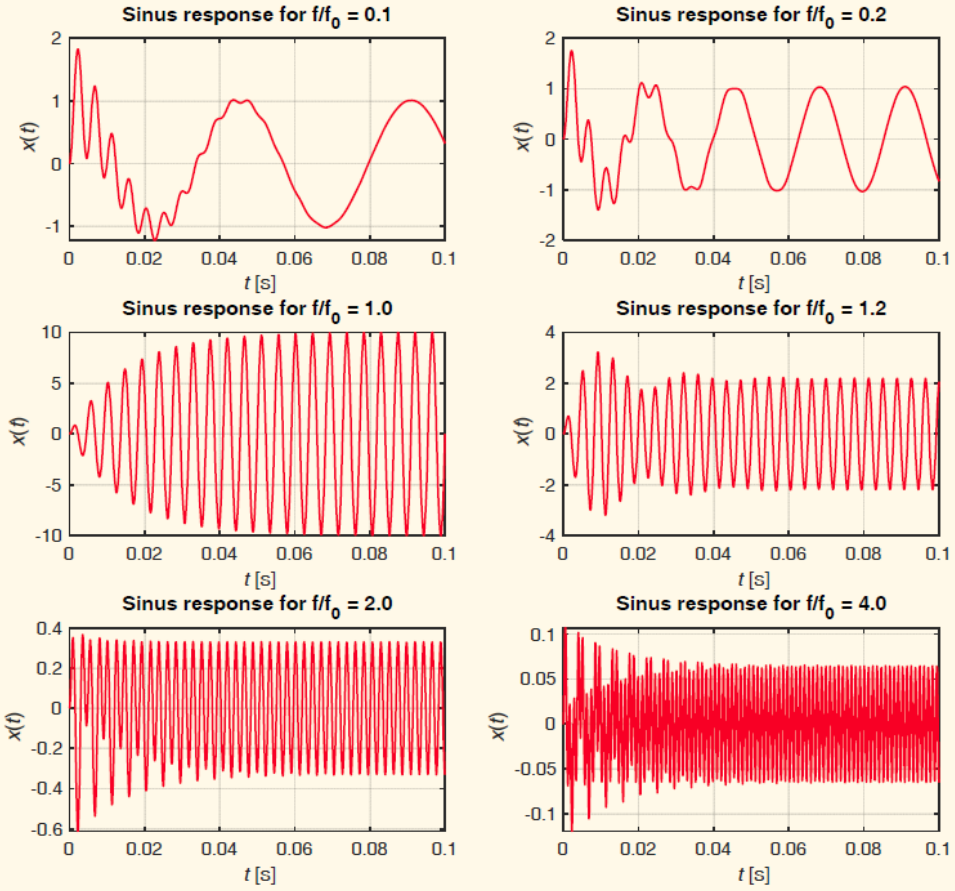

Fig. 1.10 Complete response of a simple oscillator with $Q = 10$ for a co-sinusoidal external force $f(t) = \cos(\omega t)$ applied for $t \geq 0$. The ratio ω/ω_0 varies between 0.1 and 4.

Generic Oscillating System

1.4.1 Helmholtz Resonator

The Helmholtz resonator consists of a volume of confined air V accessible through a cylinder called "neck", as shown in Fig. 1.11-b). With respect to the previous case, in a cylinder the mass of the piston is replaced by the mass of air in the neck. The mass m is equal to

$$m = \rho S L \tag{1.54}$$

while the constant K can be defined as

$$K = \frac{\rho S^2 c^2}{V} \tag{1.55}$$

where ρ is the density of the air and c the speed of sound.

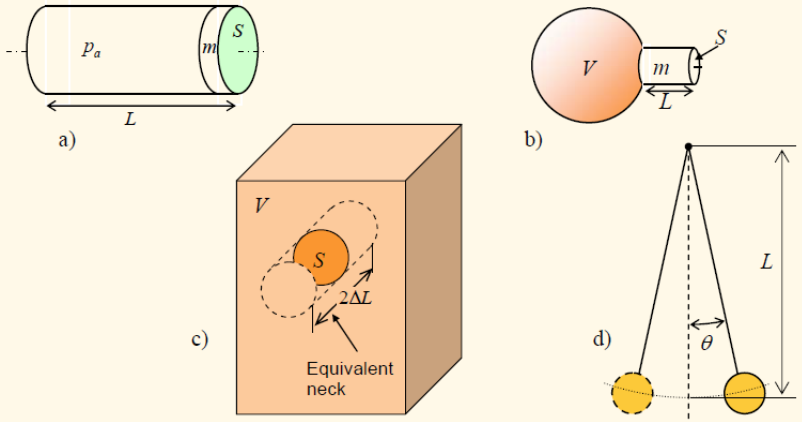

Fig. 1.11 Simple vibrating systems. a) Piston in a cylinder. b) Helmholtz resonator; c) Helmholtz resonator without "neck" (as the "cajón" box-shaped percussion instrument). d) Pendulum. (Modified from [4]).

According to Definition 1.2, the natural frequency of the system is equal to

$$f_0 = \frac{1}{2\pi}\sqrt{\frac{K}{m}} = \frac{c}{2\pi}\sqrt{\frac{S}{VL}}. \tag{1.56}$$

Fig. 1.11-c) shows the "neckless" variant of the Helmholtz oscillator where the confined cavity is accessible from a hole with radius r. In this case the oscillating mass m can be calculated by means of the "equivalent neck" which has a length equal to

$$2\Delta L = \frac{16}{3\pi} r \tag{1.57}$$

for which the mass m is

$$m = \rho S L = \rho\left(\pi r^2\right)\left(\frac{16}{3\pi}\right) \cong 5.33\rho r^3. \tag{1.58}$$

The natural frequency will therefore be equal to

$$f_0 = \frac{c}{2\pi}\sqrt{\frac{1.85r}{V}}. \tag{1.59}$$

Moreover, note that in case the surface around the hole is not wide, the natural frequency is lower than the calculated one.

Analogy with Electrical Circuits

1.4.2.1 Kirchhoff Laws

In *circuit analysis* with *lumped-element model* or *lumped-parameters model* [1], are characterized by two electrical (or acoustical or mechanical or electromagnetic ...), quantities with the following properties:

1. one of type denoted as "through" or "flux", $\phi(t)$;
2. one of type denoted as "at-the-ends" or "potential", $\xi(t)$
3. such that their product is the instantaneous power: $p(t) = \phi(t)\xi(t)$.

The notation "through" or "flux", and "at-the-ends" or "potential", refers to the definition of the *constitutive relationships*[6] of a given *element* and are interchangeable.

Kirchhoff's first law, or *Kirchhoff's current law* (KCL), states that: *The current flowing into a closed surface (or a node) is equal to current flowing out of it.* That is

$$\sum_k i_k(t) = 0. \tag{1.61}$$

The second law of Kirchhoff, or *Kirchhoff's voltage law* (KVL), states that: *For a closed loop series path the algebraic sum of all the voltages around any closed loop in a circuit is equal to zero.* That is

$$\sum_k v_k(t) = 0. \tag{1.62}$$

Property 1.3. *Power Conservation Principle* - The basic consequence of Kirchhoff's topological laws is the law of conservation of power. Given a circuit with R branches we have that

$$P(t) = \sum_{k=1}^{R} v_k(t) i_k(t). \tag{1.63}$$

Fig. 1.12 Electric bipole with the coordinate verses of currents $i(t)$ and voltage $v(t)$ signs.

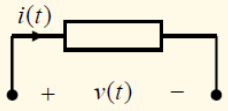

$i(t)$: electric current (quantity "through")

$v(t)$: voltage (quantity "at the ends")

$$v(t) = Ri(t), \quad \Leftrightarrow \quad i(t) = \frac{v(t)}{R} \qquad \text{Resistor } R$$

$$v(t) = \frac{1}{C}\int i(t)dt, \quad \Leftrightarrow \quad i(t) = C\frac{dv(t)}{dt} \qquad \text{Condenser } C$$

$$v(t) = L\frac{di(t)}{dt}, \quad \Leftrightarrow \quad i(t) = \frac{1}{L}\int v(t)dt \qquad \text{Inductor } L.$$

The fundamental basis for the circuit representation also of non-electric structures is based on the definition of variables of the *flow* and *potential* type such that the topological laws of Kirchhoff, and consequently the law of conservation of power (1.63), are valid. As a consequence it is possible to define, in the domain of interest, the circuit components, analogous to the resistor, capacitor and inductor.

However, the choice of the mechanical variables in analogy to the electrical variables is not univocal and there are two widely used analogies: the *analogy of mobility* and the *analogy of impedance*.

- The analogy of mobility, is an indirect analogy where the force is analogous to current and velocity to the voltage.
- The analogy of impedance, is a direct analogy where the force is analogous to voltage and current to the velocity.

Analogy of Mobility

In the analogy of mobility, we have that the force $f(t)$ is the flux quantity and velocity $v(t)$ is the potential quantity.
Thus let indicating the velocity as $v(t) = x^{\cdot}(t)$, the Eqn. of the oscillator can be written as

$$m\dot{v}(t) + Rv(t) + K\int v(t)dt = f(t).$$

$$v(t) = \frac{1}{m}\int f(t)dt, \qquad \text{Mass} \qquad C = m$$

$$v(t) = R^{-1}f(t), \qquad \text{Damper} \qquad R_e = R^{-1}$$

$$v(t) = -K^{-1}\frac{df(t)}{dt}, \qquad \text{Spring} \qquad L = K^{-1}.$$

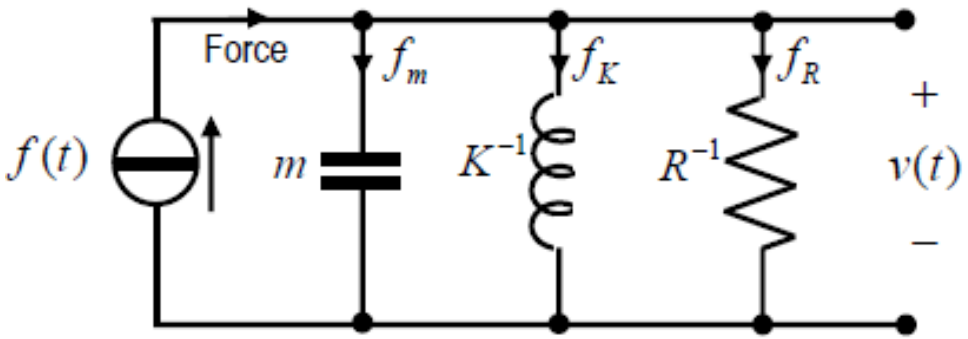

$f(t) \to i(t)$
$1/K \to L$
$m \to C$
$1/R \to R_e$
$v(t) \to u(t)$

$$v(t) = Ri(t), \quad \Leftrightarrow \quad i(t) = \frac{v(t)}{R} \qquad \text{Resistor } R$$

$$v(t) = \frac{1}{C}\int i(t)dt, \quad \Leftrightarrow \quad i(t) = C\frac{dv(t)}{dt} \qquad \text{Condenser } C$$

$$v(t) = L\frac{di(t)}{dt}, \quad \Leftrightarrow \quad i(t) = \frac{1}{L}\int v(t)dt \qquad \text{Inductor } L.$$

$$\sum_k i_k(t) = 0.$$

$$\sum_k v_k(t) = 0.$$

$$P(t) = \sum_{k=1}^{R} v_k(t)i_k(t).$$

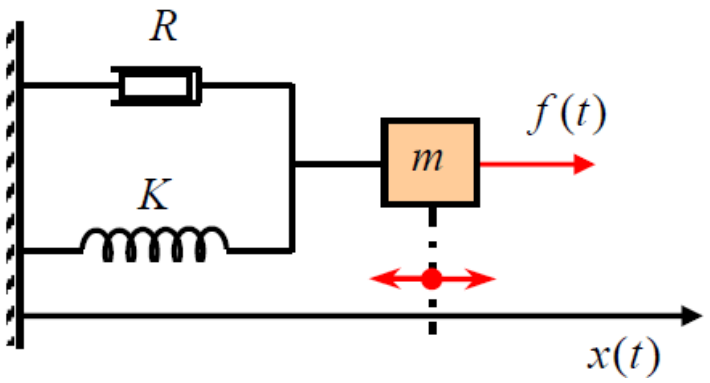

Fig. 1.13 Analogy of mobility. Equivalent electrical circuit (parallel resonant circuit) of the mechanical oscillator of Fig. 1.5.

Analogy of Impedence

In the analogy of impedance we have that the force *f*(*t*), analogous to voltage, is the potential quantity, and velocity *v*(*t*) is the flux quantity. However, in this case we have the sum of three potentials, so the equation is interpreted as the KVL of a mesh with three circuit elements in series as shown in Fig. 1.14.

$$m\dot{v}(t) + Rv(t) + K\int v(t)dt = f(t).$$

$$f(t) = -\frac{1}{K}\int v(t)dt \qquad \text{Spring} \qquad C = K^{-1}$$

$$f(t) = Rv(t), \qquad \text{Damper} \qquad R_e = R$$

$$f(t) = m\frac{dv(t)}{dt} \qquad \text{Mass} \qquad L = m.$$

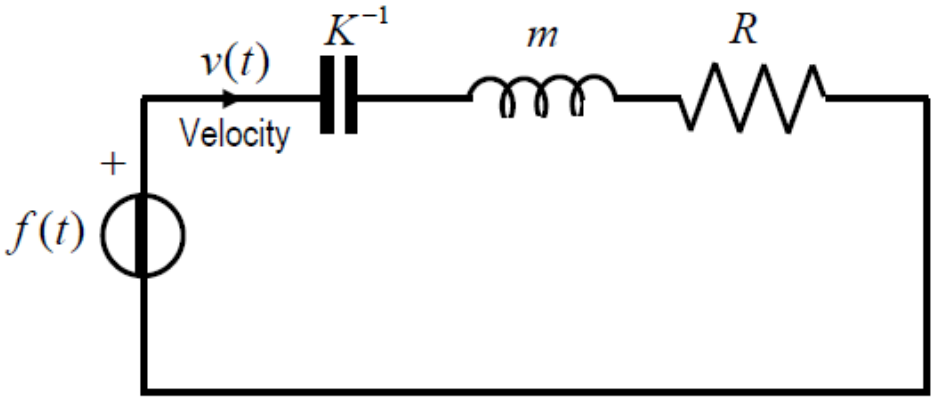

$f(t) \to u(t)$

$1/K \to C$

$m \to L$

$R \to R_e$

$v(t) \to i(t)$

$$v(t) = Ri(t), \quad \Leftrightarrow \quad i(t) = \frac{v(t)}{R} \qquad \text{Resistor } R$$

$$v(t) = \frac{1}{C}\int i(t)dt, \quad \Leftrightarrow \quad i(t) = C\frac{dv(t)}{dt} \qquad \text{Condenser } C$$

$$v(t) = L\frac{di(t)}{dt}, \quad \Leftrightarrow \quad i(t) = \frac{1}{L}\int v(t)dt \qquad \text{Inductor } L.$$

$$\sum_k i_k(t) = 0.$$

$$\sum_k v_k(t) = 0.$$

$$P(t) = \sum_{k=1}^{R} v_k(t)i_k(t).$$

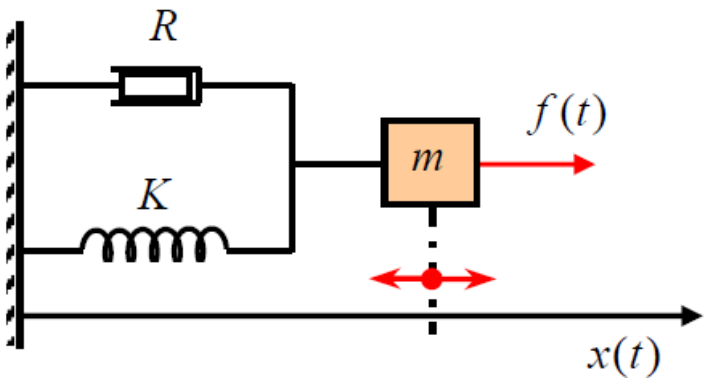

Fig. 1.14 Analogy of impedence. Equivalent electrical circuit (series resonant circuit) of the mechanical oscillator of Fig. 1.5.

Nonlinear Oscillating Systems

In fact, in many acoustic musical instruments, there are “acoustically interesting” timbres in the presence of nonlinearity in the excitation organs such as, for example, in the interaction of the **bow with the violin string**, in the **hammer striking the piano string** or in **reed instruments** such as saxophone and clarinet and in many other cases

In general terms, a nonlinear dynamical system is a system such that the superposition principle is no longer valid a and that can be described by a nth-order nonlinear ordinary differential equation (ODE). Let $u(t)$, $x(t)$ be, respectively, the external forcing, the output signal a general form of a nonlinear dynamical system can be written as

$$g(t, x(t), \dot{x}(t), \ddot{x}(t), \ldots) = f(t, u(t), \dot{u}(t), \ddot{u}(t), \ldots) \tag{1.72}$$

where $f(\cdot)$ and $g(\cdot)$ represent the system structure.

For the study of equation (1.72), we proceed to the reduction of the ordinary nth-order ODE as a system of n $1st$-order differential equations. This technique, is based on the introduction of a new quantity called the *state variable* ($w(t)$, $\dot{w}(t)$, ...), that allows to greatly simplify some types of problems, avoiding the introduction of complex forms of ODE solution.

Nonlinear State Equations

Example 1.1. For example, consider a system (without external forcing $u(t) = 0$) described by the following $3rd$-order ODE

$$\dddot{x} = f(t, x, \dot{x}, \ddot{x})$$

with a simple change of variables, placing $w_1 = x$, $w_2 = \dot{x}$ and $w_3 = \ddot{x}$, you can replace the above $3rd$-order ODE with a $1st$-order system of ODEs. That is

$$\begin{aligned} \dot{w}_1 &= w_2 \\ \dot{w}_2 &= w_3 \\ \dot{w}_3 &= f(t_1, w_1, w_2, w_3). \end{aligned} \tag{1.73}$$

It is easy to see that the $3rd$-order ODE and the $1st$-order system's ODEs are equivalent in the sense that, if $x(t)$ is a solution of the $3rd$-order ODE, then $w_1(t) = x(t)$, $w_2(t) = \dot{x}(t)$ and $w_3(t) = \ddot{x}(t)$ are the solutions of the system of ODEs.

$$\begin{aligned} \dot{w}_1 &= f_1(t, w_1, \ldots, w_n, u_1, \ldots, u_p) \\ \dot{w}_2 &= f_2(t, w_1, \ldots, w_n, u_1, \ldots, u_p) \\ &\vdots \qquad\qquad \vdots \\ \dot{w}_n &= f_n(t, w_1, \ldots, w_n, u_1, \ldots, u_p) \end{aligned}$$

$$\dot{\mathbf{w}} = \mathbf{f}(t, \mathbf{w}, \mathbf{u}).$$ State equation

$$\mathbf{y} = \mathbf{h}(t, \mathbf{w}, \mathbf{u}).$$ Output equation

Stationary state equations

$$\dot{\mathbf{w}} = \mathbf{f}(\mathbf{w}, \mathbf{u})$$

$$\mathbf{y} = \mathbf{h}(\mathbf{w}, \mathbf{u})$$

Linear State Equations

Finally, observe that in the case of linear and time-invariant system, the state-space representation can be written as

$$\begin{aligned} \dot{\mathbf{w}} &= \mathbf{A}\mathbf{w} + \mathbf{B}\mathbf{u} \\ \mathbf{y} &= \mathbf{C}\mathbf{w} + \mathbf{D}\mathbf{u} \end{aligned} \tag{1.78}$$

where $\mathbf{A} \in \mathbb{R}^{n\times n}$, $\mathbf{B} \in \mathbb{R}^{n\times p}$, $\mathbf{C} \in \mathbb{R}^{q\times n}$ and $\mathbf{D} \in \mathbb{R}^{q\times p}$ are the matrices that characterize the linear system.

In particolar, in the discrete-time domain is defined by the following system of equations

$$\begin{aligned} \mathbf{w}[n+1] &= \mathbf{A}\mathbf{w}[n] + \mathbf{B}x[n] \\ y[n] &= \mathbf{C}\mathbf{w}[n] + Dx[n] \end{aligned} \tag{A.31}$$

in which the vector $\mathbf{w} \in \mathbb{R}^{M\times 1}$ represents the internal state of the system and the matrices $\mathbf{A}, \mathbf{B}, \mathbf{C}$ and the scalar D are determinable, as in illustrated below, according to the parameters of the circuit. The signal flow graph (SFG) of the state space form is illustrated in Fig. A.6.

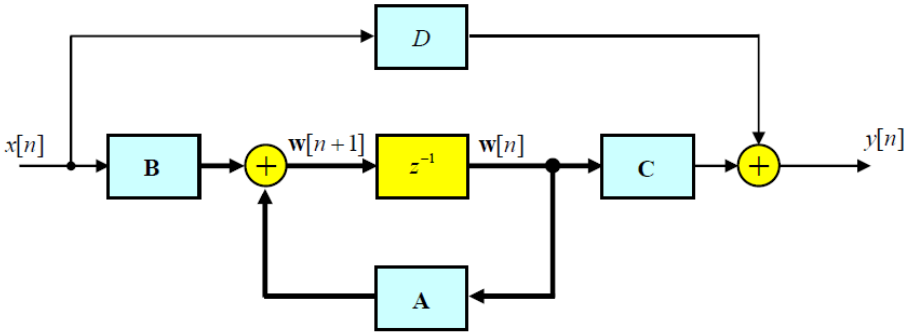

Fig. A.6 State space representation of the single-input-single-output (SISO) discrete-time system described by the finite difference equation (A.13). The block z^{-1} implements an M-length array of single delay.

2*nd* Order Nonlinear Oscillating Systems

$$m\ddot{x}(t) + R\dot{x}(t) + Kx(t) = f(x, \dot{x}, t)$$

Where K is nonlinear function. E.g. $K(x) = K_1 x + K_2 x^2 + \ldots$

R is nonlinear function. E.g. $R(x) = R_1 x + R_2 x^2 + \ldots$

1.5.3 Undamped Pendulum

As the first example of a nonlinear oscillator, let's consider the simple *undamped nonlinear planar pendulum*. Let's θ be the angle of the pendulum respect to the vertical axes of rest position (see Fig. 1.11), using Lagrangian mechanics the dynamics of a pendulum under the influence of gravity, the motion of a pendulum can be described by the dimensionless nonlinear equation $\ddot{\theta} = \sin(\theta)$.

$$\ddot{x} = \sin(x). \quad \Rightarrow \quad \begin{aligned} \dot{w}_1 &= w_2 \\ \dot{w}_2 &= -\sin(w_1). \end{aligned}$$

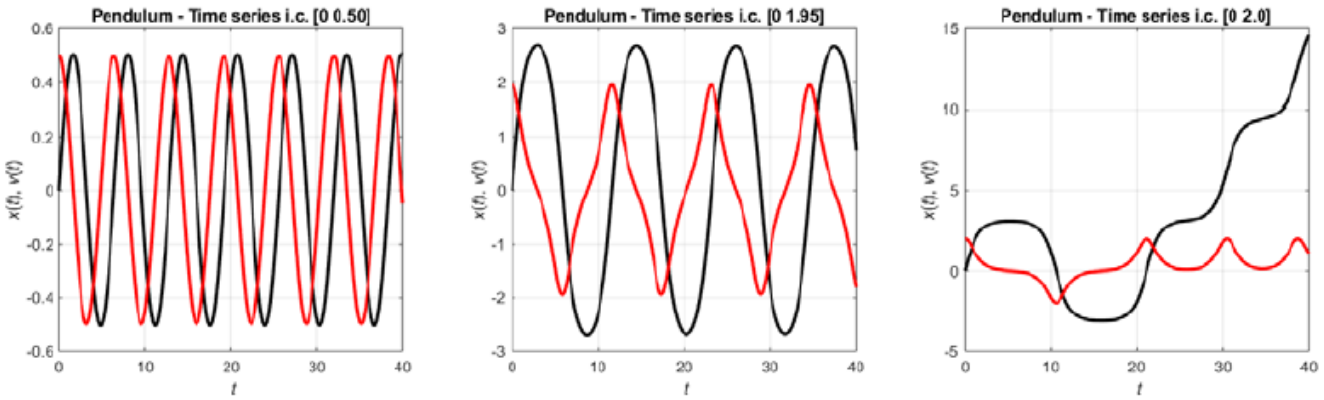

Fig. 1.15 Dynamic of simple pendulum. Time domain evolution of the position $x(t)$ and the velocity $\dot{x}(t)$, starting from different i.c.

State-plane or Phase-plane

The locus in the w_1-w_2 plane, that is the solution for all $\mathbf{w}(t)$ for all $t \geq 0$, represents a trajectory or orbit of (1.81) denoted as state-plane or phase-plane. In general these curves can be written in vector form as

$$\dot{\mathbf{w}} = \mathbf{f}(\mathbf{w})$$

where $\mathbf{f}(\mathbf{w})$ is the vector $[f_1(\mathbf{w})\ f_2(\mathbf{w})]$, that we can considered as a *vector field* on the state plane, which means that to each point $\mathbf{w}$ in the plane, we assign a vector $\mathbf{f}(\mathbf{w})$. Thus, repeating this at every point in a grid covering the plane we obtain the *vector field diagram*. For example, in Fig. 1.16 is represented the vector field diagram for the pendulum Eqn. (1.81) for a grid $w_1, w_2 \in [-\pi, \pi]$ with a step fixed equal to 0.5. Note that, overlapped to the vector field are reported the state trajectory (qt the steady-state) for three specific i.c.

Phase portrait and Vector field

Fig. 1.16 Vector field of the pendulum Eqn.(1.81) for a grid $w_1, w_2 \in [-\pi : 0.5 : \pi]$. Moreover, are reported two state trajectory for three specific i.c., which values are reported in the figure legend, identical to that of the time series in Fig. 1.15.

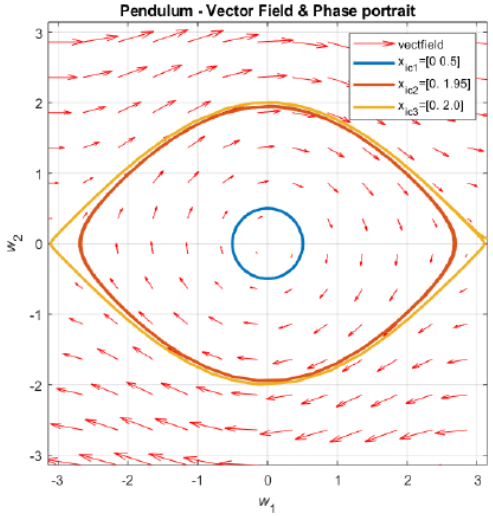

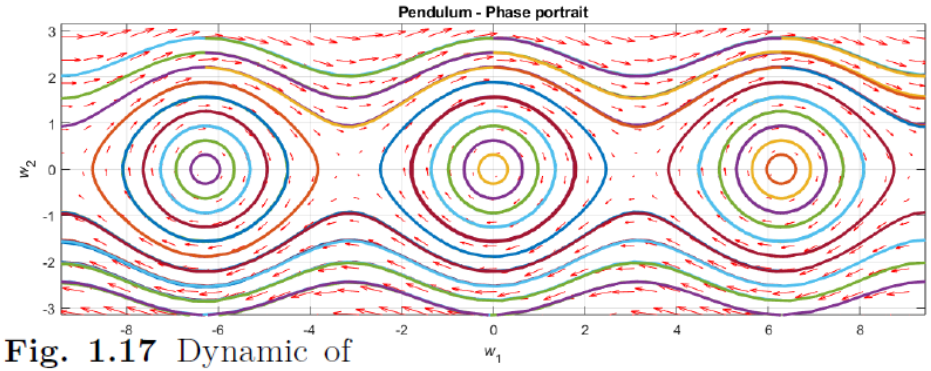

Fig. 1.17 Dynamic of simple pendulum. Phase portrait for several i.c. from $x(0) = -2\pi$ and $v(0) \in [-\pi\ \pi]$; and from $x(0) = 0$ and $v(0) \in [-\pi, \pi]$, etc. Note that the w_1-axis (that is the θ angle of pendulum), wraps onto itself after every 2π radians.

Van der Pol Nonlinear Oscillator

$$m\ddot{x}(t) + R\dot{x}(t) + Kx(t) = f(x, \dot{x}, t)$$

$$\ddot{x} - \mu(1 - x^2)\dot{x} + x = 0$$

$$\dot{w}_1 = w_2$$

$$\dot{w}_2 = -w_1 + \mu(1 - w_1^2)w_2$$

$K = 1$, $m = 1$
$f(t) = 0$
$R(x) = \mu\, x(1 - x^2)$

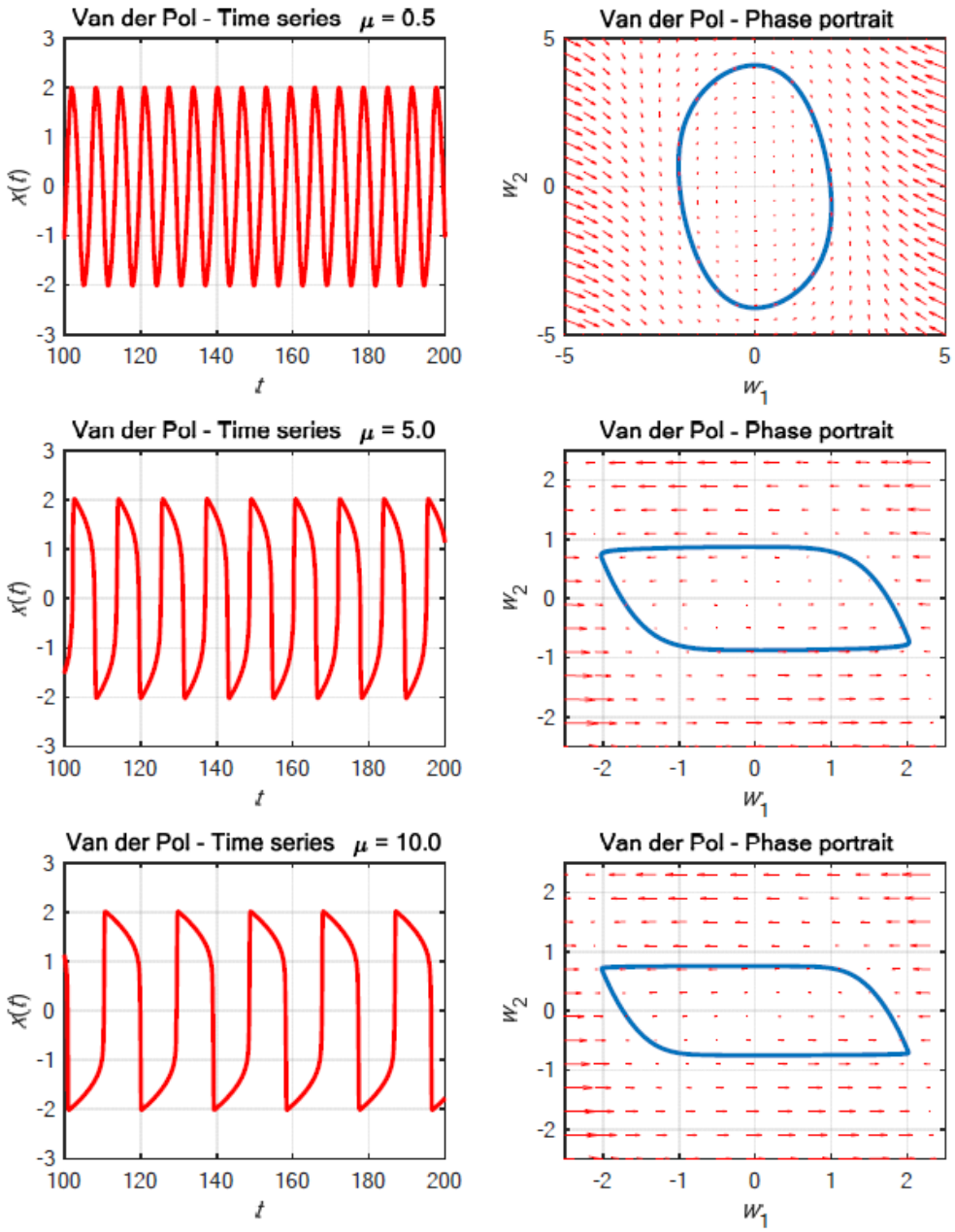

Fig. 1.18 Dynamic of the Van der Pol oscillator for i.c. $x(0) = 1$ and $\dot{x}(0) = 0$ and for different values of the parameter indicating the nonlinearity $\mu = [0.5\ 5\ 10]$.

Van der Pol Nonlinear Oscillator

```
% -----------------------
% Van der Pol Oscillator
% -----------------------
clear all; close all

% Define Van der Pol Oscillator function
f = @VanderPol;

TT = 'Van der Pol Oscillator';
tspan = [0 60];  % temporal range
X_vectfield_range = [ -3: 0.25: 3 ];
Y_vectfield_range = [ -3: 0.25: 3 ];
nRun = 50;
% set Random i.c.
for n = 1 : nRun
   x_ic(n,:) = 5 * (rand([2,1])- 0.5);
end
% ---------------------
% Plot Phase Portratit
% ---------------------
subplot(1,2,2);
    vectfield(f,X_vectfield_range , Y_vectfield_range);
    hold on; grid on; box on;
    for n = 1 : nRun
      x_ic'
      [ts,ys] = ode45(f,  tspan , x_ic(n,:));
      plot(ys(:,1),ys(:,2) , 'LineWidth',2);
    end
    title(sprintf('%s - Phase portrait', TT));

    xlabel('{\itw}_1');
    ylabel('{\itw}_2');
```

```
% --------------------
subplot(1,2,1); hold on; grid on; box on;
    for n = 1 : nRun
        [ts,ys] = ode45(f,  tspan , x_ic(n,:));
        plot(ts(1:50), ys(1:50,1),  'LineWidth',1);
    end
    grid on;
    title(sprintf('%s - Time series',TT));
    xlabel('t');
    ylabel('{\itx}({\itt})')



    % ------------------------------
    function dXdt = VanderPol(t,X)
        x = X(1);
        y = X(2);
        mu = 1; % 0, 1, 2, 5 10, 20, 50
        dxdt = mu*(x-1/3*x^3-y);
        dydt = x/mu;
        dXdt = [dxdt; dydt];
    end
```

Van der Pol Nonlinear Oscillator (ode45)

```
[ts,ys] = ode45(@VanderPol,  tspan , xic );

function dXdt = VanderPol(t,X)
        x = X(1);
        y = X(2);
        mu = 1; % 0, 1, 2, 5 10, 20, 50
        dxdt = mu*(x-1/3*x^3-y);
        dydt = x/mu;
        dXdt = [dxdt; dydt];
end
```

«Ode45» solve an *Ordinary Differential Equation* where «*f*» is the callback function externally defined (in state space form), «tspan» the vector containing the tame-samples and «*xic*» the vector containing the initial conditions.

In Python we can use «scipy.integrate.ode()»

```
MATLAB:  [t,y]=ode45(@vdp1,[0 20],[2 0]);

Python:  import numpy as np
         def  vdp1(t,y):
             dydt= np.array([y[1], (1-y[0]**2)*y[1]-y[0]])
             return dydt
         import scipy integrate
         l=scipy.integrate.ode(vdp1([0,20],[2,0])).set_integrator("dopri5")
```

ode45

Solve nonstiff differential equations — medium order method

collap

Syntax

```
[t,y] = ode45(odefun,tspan,y0)
[t,y] = ode45(odefun,tspan,y0,options)
[t,y,te,ye,ie] = ode45(odefun,tspan,y0,options)
sol = ode45( __ )
```

Description

`[t,y] = ode45(odefun,tspan,y0)`, where `tspan = [t0 tf]`, integrates the system of differential equations $y' = f(t, y)$ from `t0` to `tf` with initial conditions `y0`. Each row in the solution array `y` corresponds to a value returned in column vector `t`.

All MATLAB® ODE solvers can solve systems of equations of the form $y' = f(t, y)$, or problems that involve a mass matrix, $M(t, y)y' = f(t, y)$. The solvers all use similar syntaxes. The `ode23s` solver only can solve problems with a mass matrix if the mass matrix is constant. `ode15s` and `ode23t` can solve problems with a mass matrix that is singular, known as differential-algebraic equations (DAEs). Specify the mass matrix using the `Mass` option of `odeset`.

`ode45` is a versatile ODE solver and is the first solver you should try for most problems. However, if the problem is stiff or requires high accuracy, then there are other ODE solvers that might be better suited to the problem. See Choose an ODE Solver for more information.

`[t,y] = ode45(odefun,tspan,y0,options)` also uses the integration settings defined by `options`, which is an argument created using the `odeset` function. For example, use the `AbsTol` and `RelTol` options to specify absolute and relative error tolerances, or the `Mass` option to provide a mass matrix.

`[t,y,te,ye,ie] = ode45(odefun,tspan,y0,options)` additionally finds where functions of (t,y), called event functions, are zero. In the output, `te` is the time of the event, `ye` is the solution at the time of the event, and `ie` is the index of the triggered event.

For each event function, specify whether the integration is to terminate at a zero and whether the direction of the zero crossing matters. Do this by setting the `'Events'` property to a function, such as `myEventFcn` or `@myEventFcn`, and creating a corresponding function: `[value,isterminal,direction] = myEventFcn(t,y)`. For more information, see ODE Event Location.

`sol = ode45( __ )` returns a structure that you can use with `deval` to evaluate the solution at any point on the interval `[t0 tf]`. You can use any of the input argument combinations in previous syntaxes.

Van der Pol Nonlinear Oscillator

```
nRun = 50;
% set Random i.c.
for n = 1 : nRun
   x_ic(n,:) = 5 * (rand([2,1])- 0.5);
end
```

50 Random Initial Conditions

Duffing Nonlinear Oscillator

$$m\ddot{x}(t) + R\dot{x}(t) + Kx(t) = f(x, \dot{x}, t)$$

$$m\ddot{x} + R\dot{x} + Kx + bx^3 = \gamma\cos(\omega t)$$

$f(t) = \gamma\sin(\omega t)$
$K(x) = K + bx^2$

For $K > 0$ (see Fig. 1.19), the Duffing oscillator can be interpreted as a forced oscillator with a spring whose restoring force depends on the displacement cube according to the following law

$$F_x = -Kx - bx^3 \tag{1.84}$$

where, for $l \gg l_0$, $K \cong 2K_m$, and $b = K_m l_0 / l^3$.

If the amplitude of the oscillation is small, the term x^3/l^3 is small and can be neglected. In addition, for $K < 0$, the Duffing oscillator describes the dynamics that such that a can be observed a chaotic motions.

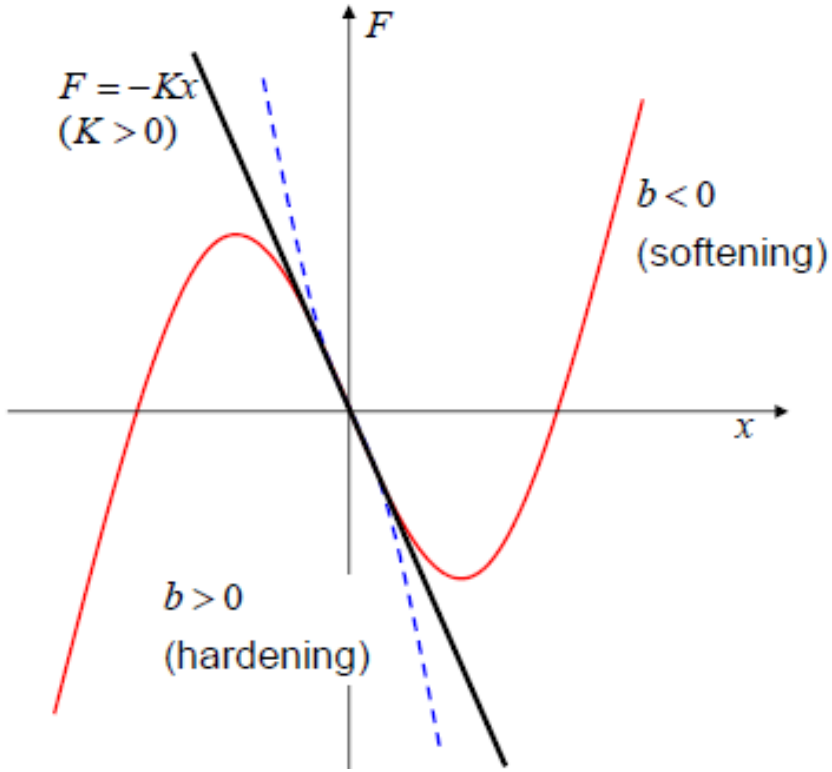

Fig. 1.19 The Duffing oscillator, for $K > 0$, can be interpreted as a forced oscillator with a nonlinear spring whose restoring force is written as $F_x = -Kx - bx^3$.

Duffing Nonlinear Oscillator

In Fig. 1.20 is reported an example of the dynamic behavior of the Duffing oscillator for $K = -1$, $R = 0.1$, $b = 0.25$, $\omega = 2$ and $\gamma = [1.3\ 1.322\ 1.5]$, for $[0,\ 1]$ i.c. Observe that by increasing the forcing amplitude γ the oscillator assumes a chaotic trend with a complex phase portrait.

For small R (i.e. $R \approx 0$), if the amplitude of the oscillation is increased, the Duffing equation of motion can be written as

$$m\ddot{x} = -Kx - bx^3 - F_0 \cos(\omega t). \tag{1.85}$$

This is the case of a simple mass-spring mechanical oscillator reported in Fig. (1.21).

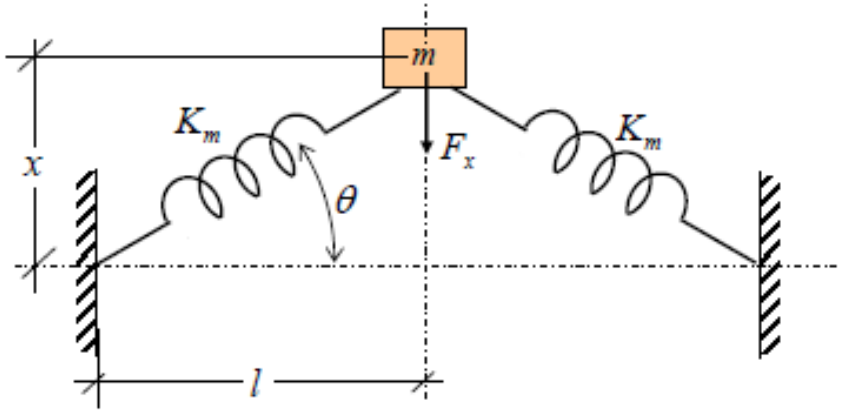

Fig. 1.21 Single mode model for nonlinear oscillator consisting of a mass-spring system without a supporting plane.

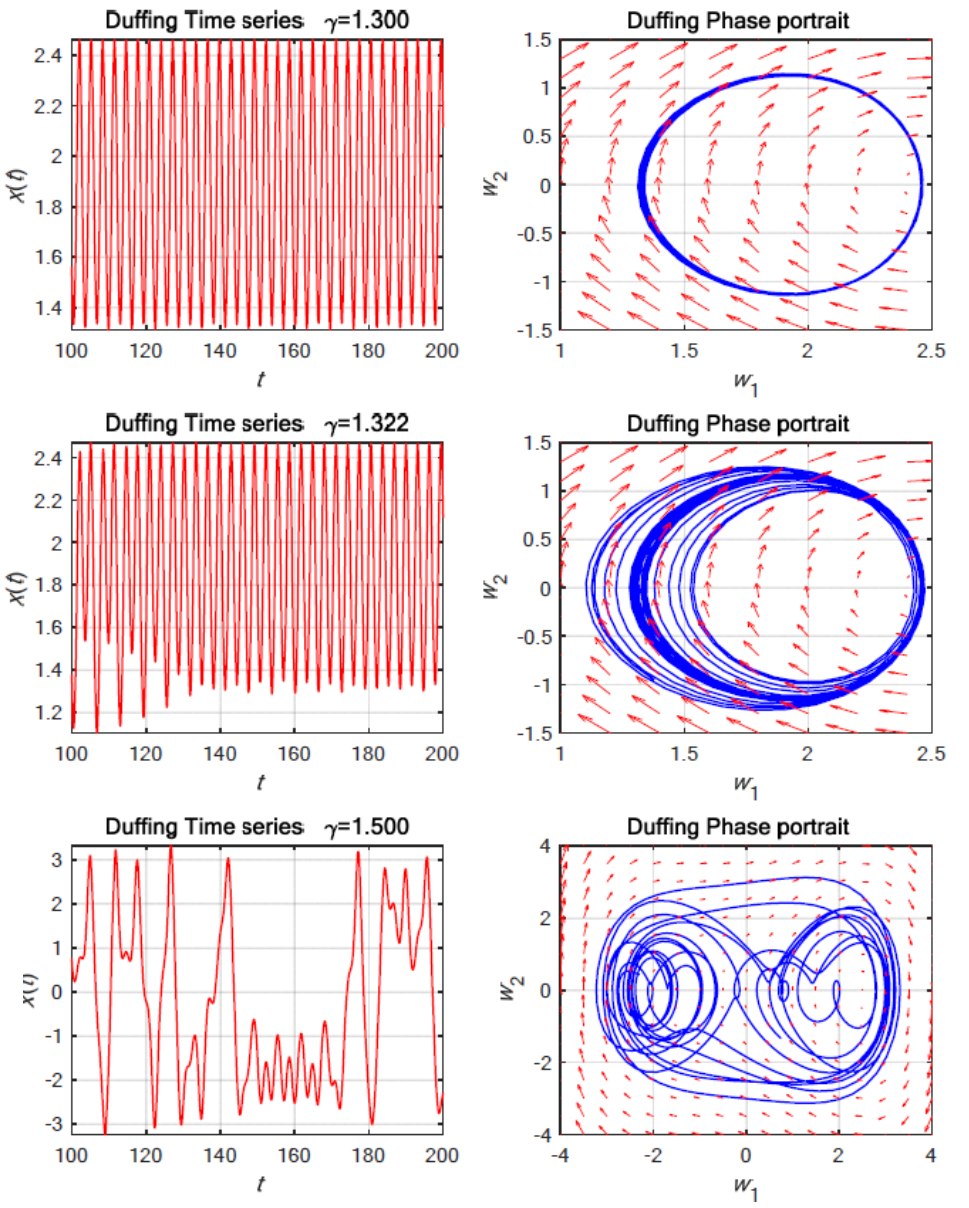

Fig. 1.20 Dynamic behavior of the Duffing oscillator for $K = -1$, $R = 0.1$, $b = 0.25$, $\omega = 2$ and $\gamma = [1.3\ 1.322\ 1.5]$, for $[0,\ 1]$ i.c. Time domain evolution of the position $x(t)$ and phase portrait. Note that for a forcing amplitude $\gamma > 1.3$ the behavior of the Duffing oscillator takes on a chaotic pattern with a complex phase portrait.

Duffing Nonlinear Oscillator

In Fig. 1.22 is reported an example of the dynamic behavior of the Duffing oscillator for $K = 1$, $R = 0$, $b = 0.25$, $\omega = 2$ and $\gamma = [1.3\ 1.322\ 1.5]$, for $[0,\ 1]$ i.c. So, also in this case by increasing the forcing amplitude the behavior of the oscillator takes on a chaotic pattern with a complex phase portrait.

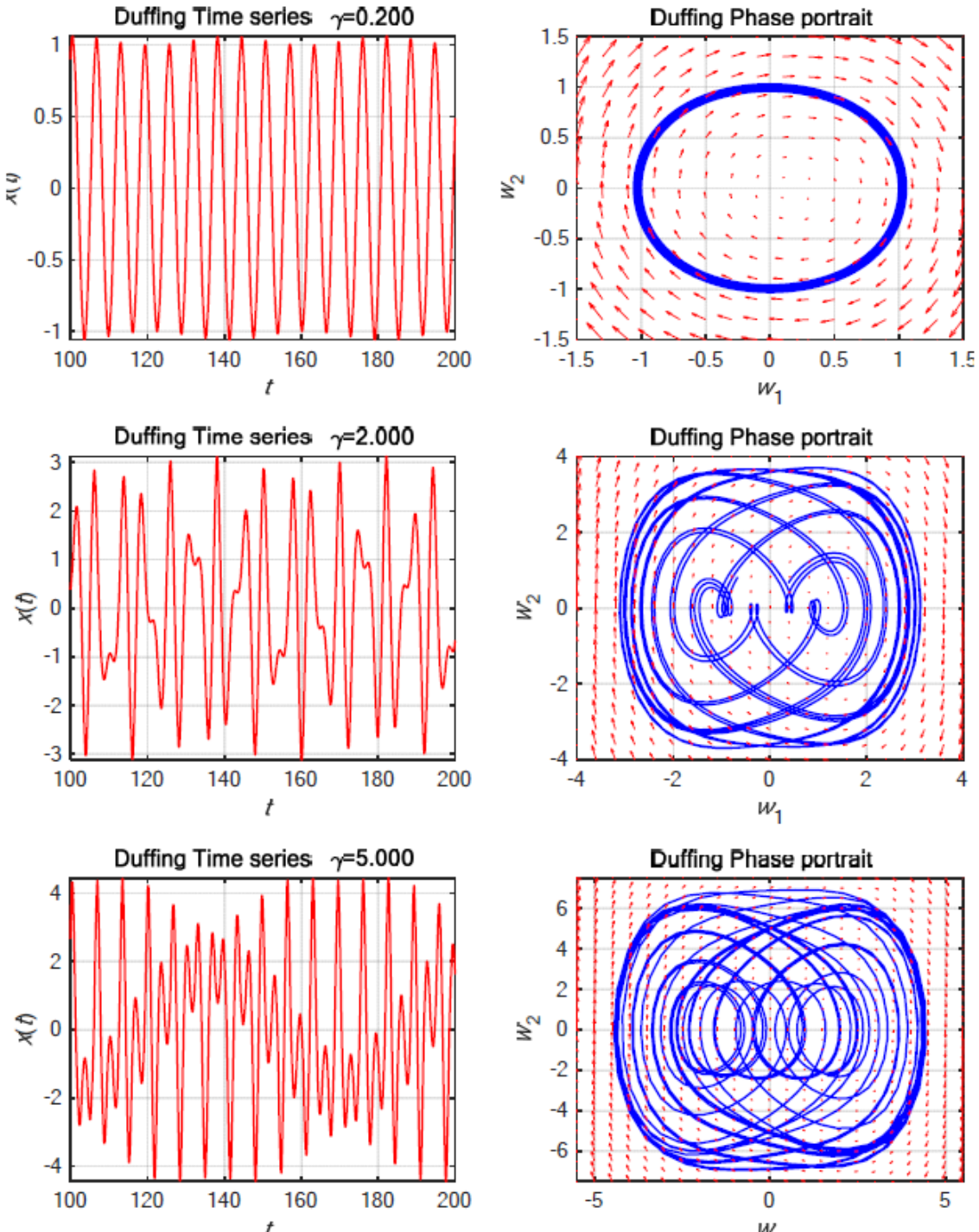

Fig. 1.22 Dynamic behavior of the Duffing oscillator for $K = 1$, $R = 0$, $b = 0.25$, $\omega = 1$ and $\gamma = [0.2\ 2\ 5]$, for $[0,\ 1]$ i.c. Time domain evolution of the position $x(t)$ and phase portrait. Note that also in this case by increasing the forcing amplitude the behavior of the oscillator takes on a chaotic pattern with a complex phase portrait.

Duffing Nonlinear Oscillator

However, for its analysis, as a first approximation of x, it is possible to consider a solution of the type $x_1 = A\cos(\omega t)$ and replace it in the right part of Eqn. (1.85) obtaining a second approximation of the displacement x, which is denoted as x_2. So

we can write

$$m\ddot{x}_2 = -KA\cos(\omega t) - b(A\cos(\omega t))^3 - F_0\cos(\omega t) \tag{1.86}$$

then, using the identity $\cos^3 x = 3/4\cos x + 1/4\cos 3x$, we get

$$\ddot{x}_2 = -\left(\frac{KA}{m} + \frac{3bA^3}{4m} + \frac{F_0}{m}\right)\cos(\omega t) - \frac{bA^3}{36m\omega^2}\cos(3\omega t). \tag{1.87}$$

This approximation, known as the Duffing method, is reliable if the terms b, A and F_0 are sufficiently small. It should be noted that the term bx^3 is responsible for generating the third harmonic of pulsation 3ω. Moreover, considering the Eqn. (1.87), equating the term $\cos(\omega t)$ to the term $A\cos(\omega t)$ (first approximation for y) we obtain

$$A\omega^2 = \frac{KA}{m} + \frac{3bA^3}{4m} + \frac{F_0}{m} \tag{1.88}$$

i.e.

$$A^2 = \frac{4m}{3b}\left(\omega^2 - \frac{K}{m} - \frac{F_0}{mA}\right).$$

Duffing Nonlinear Oscillators

```
% ---------------------------------------
function dXdt = VanderPol(t,X)
x = X(1);
y = X(2);
mu = 1; % 0, 1, 2, 5 10, 20, 50
dxdt = mu*(x-1/3*x^3-y);
dydt = x/mu;
dXdt = [dxdt; dydt];
end

function y = pendulum(t, x)
    w1 = x(1);  %i. c.
    w2 = x(2);
    dw1 = w2;
    dw2 = -sin(w1);
    y = [dw1; dw2];
end

function dy = rigid(t,y)
    dy = zeros(3,1);    % a column vector
    dy(1) =  y(2) * y(3);
    dy(2) = -y(1) * y(3);
    dy(3) = -0.51 * y(1) * y(2);
end
```

```
function wdot = duff(t, w)
global K R b gamma omega;
    wdot(1) = w(2);
    wdot(2) = -R*w(2) - K*w(1) - b*w(1)^3 + gamma*cos(omega*t);
    wdot=wdot';
End
```

```
function dy = lorenz( t,y)
    sigma = 10.0; %
    rho= 28.0; %rho
    beta = 8.0/3.0; %beta

    dy(1,1) =  sigma*(y(2)-y(1));
    dy(2,1) =  rho*y(1) - y(2) - y(1)*y(3) ;
    dy(3,1) =  y(1)*y(2) - beta*y(3);
en
```

Lorentz

```
function dy = lorenz( t,y)
    sigma = 10.0; %
    rho= 28.0; %rho
    beta = 8.0/3.0; %beta

    dy(1,1) =  sigma*(y(2)-y(1));
    dy(2,1) =  rho*y(1) - y(2) - y(1)*y(3) ;
    dy(3,1) =  y(1)*y(2) - beta*y(3);
end
```

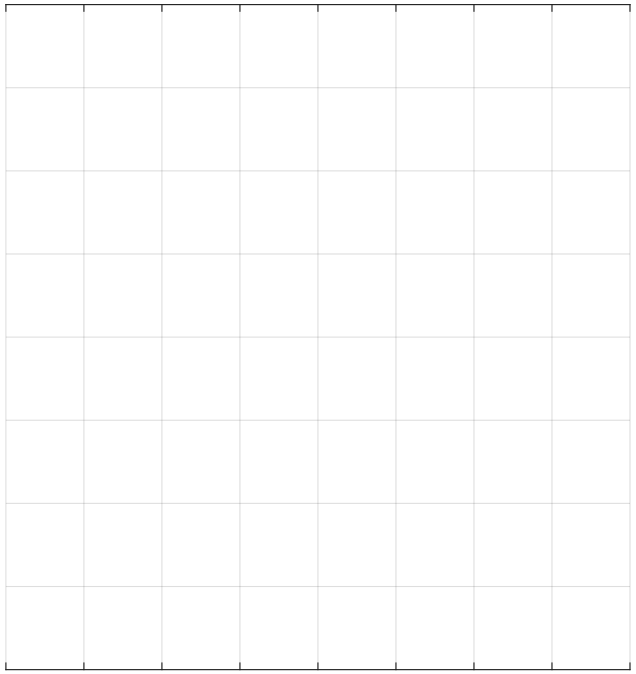

Continuous Vibrating Systems

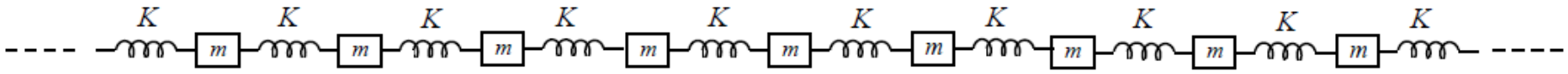

Fig. 1.25 Mechanical oscillator with N mass-spring elements. At equal length, for $N \to \infty$, the system become continuous, defined as *distributed parameters system* and characterized by an infinite number of modes.

For the development of the model, consider a string of infinite length and for simplicity we suppose that it does not offer an appreciable resistance to bending, cutting and that, for small displacements, its tension remain constant. We indicate, with μ [kg/m] the linear mass-density, with K [N] the tension, and with $y(x,t)$ the displacement (considered only along the y axis). For the determination of the model of the stretched string, we consider an infinitesimal long section Δx so that the mass of the section is equal to $\mu \Delta x$.

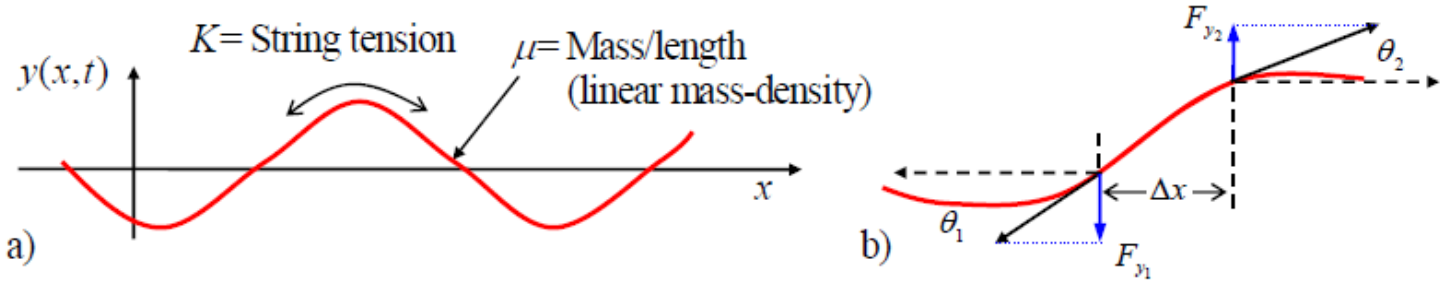

Fig. 1.26 Representation of the string of infinite length (a), and its infinitesimal section (b).

Continuous Vibrating Systems

Model derived by the Newton's low: *F=ma*

$$1)\quad mass\text{-}density \times transversal\text{-}acceleration \quad \rightarrow \quad \mu\frac{\partial^2 y(x,t)}{\partial t^2} \quad \text{or} \quad \mu\ddot{y}$$

$$2)\quad tension \times curvature \quad \rightarrow \quad K\frac{\partial^2 y(x,t)}{\partial x^2} \quad \text{or} \quad Ky''.$$

Thus, the equilibrium between the two forces leads to the writing of the wave equation (or D'Alembert[7] equation) to a single dimension (1-D wave equation)

$$K\frac{\partial^2 y(x,t)}{\partial x^2} = \mu\frac{\partial^2 y(x,t)}{\partial t^2}. \tag{1.93}$$

By defining the quantity $c^2 = K/\mu$ the previous equation can be rewritten as

$$\frac{\partial^2 y(x,t)}{\partial x^2} = \frac{1}{c^2}\frac{\partial^2 y(x,t)}{\partial t^2}. \tag{1.94}$$

Solution of the String Wave Equation

The two main assumptions for determining the solution of Eqn. (1.94) are that an infinitesimal string segment dx, moves only vertically (so that only from the transversal components, can be calculated the acceleration) and that the amplitude of the vibration is small. With these assumptions the solution of the Eqn. (1.94), (published by D'Alembert in 1747), can be written as

$$y(x,t) = y^{+}\left(t - \frac{x}{c}\right) + y^{-}\left(t + \frac{x}{c}\right) \tag{1.95}$$

where the term $y^{+}(t - \frac{x}{c})$ represents a wave traveling to the right, or *progressive wave*, while the term $y^{-}(t + \frac{x}{c})$ represents a wave traveling to the left, or *regressive wave*, shown in Fig. (1.27). So, the constant c represents the *wave propagation speed*.

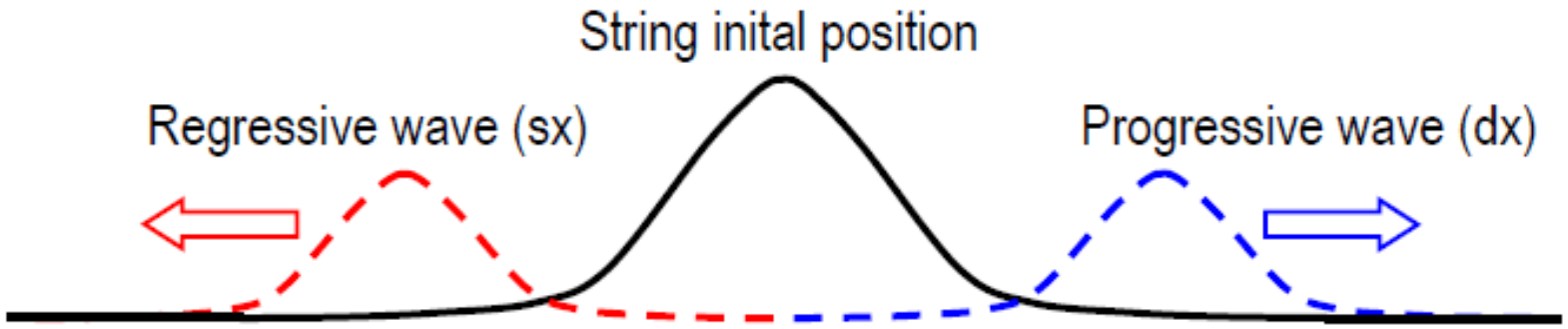

Solution of the String Wave Equation

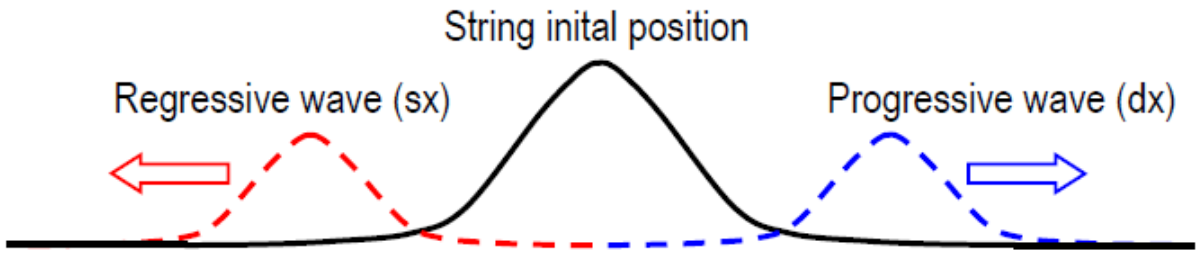

In addition, you can find a *harmonic solution of the wave equation* that, in exponential notation, takes the form

$$\bar{y}(x,t) = \mathbf{A}e^{j(\omega t - kx)} + \mathbf{B}e^{j(\omega t + kx)} \tag{1.96}$$

in which the quantity $\bar{y}$, $\mathbf{A}$ and $\mathbf{B}$ are complex (defined in §1.2.3 as *rotating vectors* and *phasors*), for which $y(x,t) = \mathrm{Re}[\bar{y}(x,t)]$.

Wave Equation: Space and Time

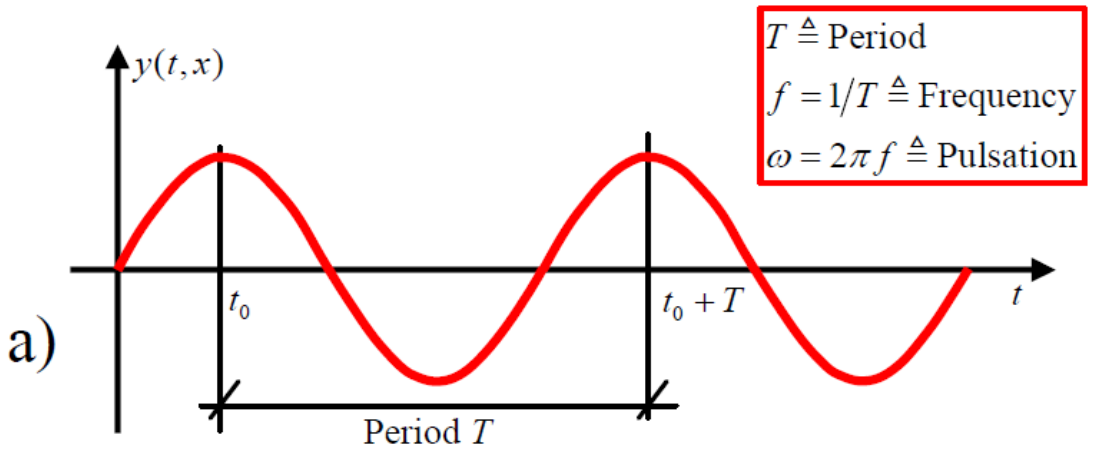

$T \triangleq$ Period

$f = 1/T \triangleq$ Frequency

$\omega = 2\pi f \triangleq$ Pulsation

Fixed space: time variable

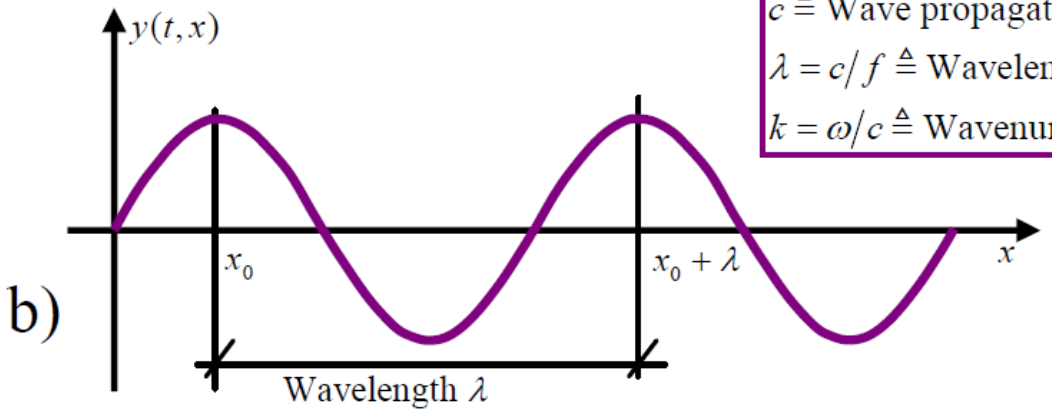

$c \triangleq$ Wave propagation speed

$\lambda = c/f \triangleq$ Wavelength

$k = \omega/c \triangleq$ Wavenumber

Fixed time: space variable

Wave Equation Solution

1.6.2.3 Bounded String Wave Solution

Consider a traveling wave that encounters a sharp change in the material in which it is propagating. In this situation a percentage of the energy, according to a certain coefficient called *reflection coefficient* k_r, will be reflected. The result is therefore that the reflection coefficient is defined as the ratio between the reflected wave and the direct wave. Considering the general solution in Eqn.(1.95) we have that

$$k_r = \frac{f^-}{f^+}.$$

Wave Equation Solution

1.6.2.4 Fixed-End String at $x = 0$

Consider the case in which a string termination, for example at $x = 0$ is fixed. In this situation the vertical displacement will necessarily be null $y(0,t) = 0$, it follows that the wave will be entirely reflected, i.e. $f^-(ct) = -f^+(ct)$. In this case the reflection

coefficient is equal to $k_r = -1$, and the reflected wave will be inverted as shown in Fig. 1.29

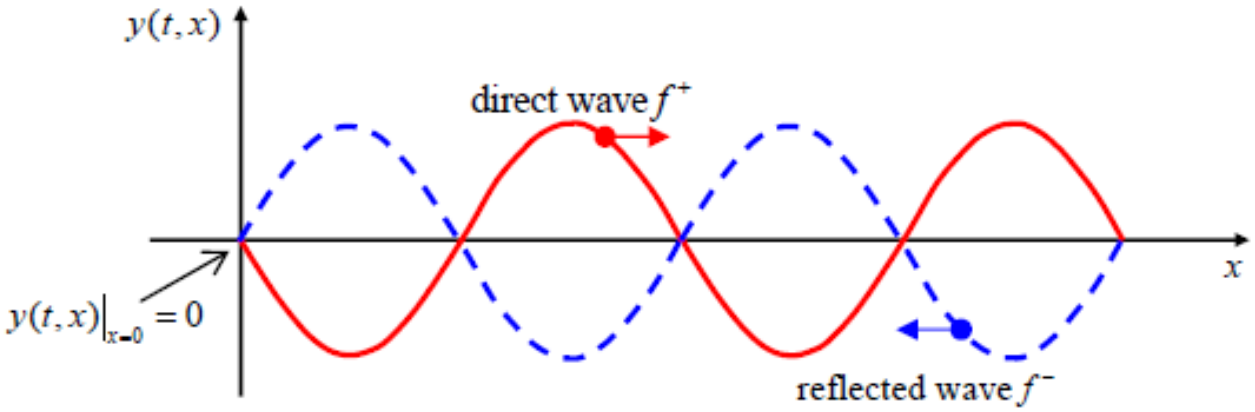

Fig. 1.29 Reflection with bound extreme. The reflected wave is inverted $k_r = -1$.

Wave Equation Solution

1.6.2.5 Free-End String at $x = 0$

In the opposite casein which the termination is completely free, since no transverse force is possible we will have that $\partial y/\partial x = 0$. Differentiating the general solution in Eqn. (1.95), we obtain $\partial y/\partial x = -f'^{+} + f'^{-}$. By integrating it can be seen that $f^{-}(ct) = f^{+}(ct)$, this means that we will have reflection without inversion as illustrated in Fig. (1.30). In this case the reflection coefficient is equal to $+1$.

In the case of several dimensions, such as in the acoustic air waves which will be treated later, it results then that the angle of incidence of a wave front on a reflecting surface is equal to the angle of the reflected wave.

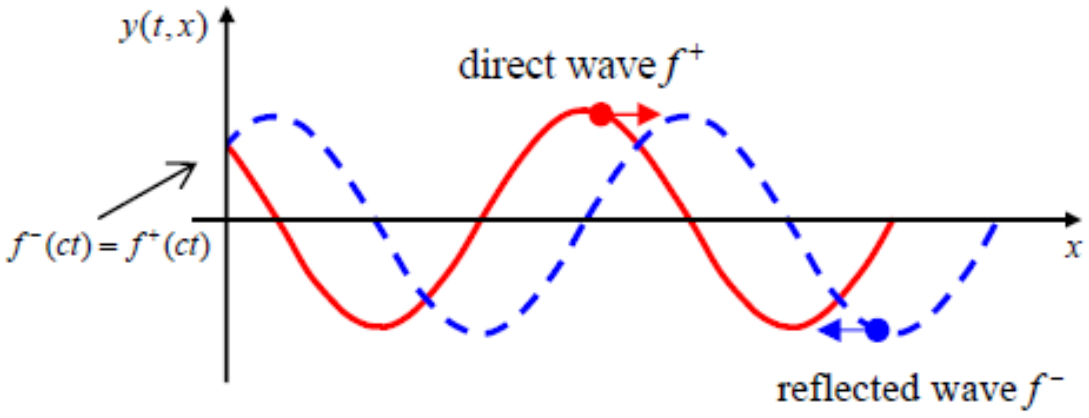

Fig. 1.30 Reflection with free extreme. The reflected wave is $k_r = 1$.

Wave Equation Solution

1.6.2.6 Standing Waves and Vibration Modes

A particular but very important case of interference is due to waves propagating in the same direction in opposite directions. Suppose the two waves with the same amplitude are defined as

$$f^+(x,t) = y_0 \sin(kx - \omega t)$$
$$f^-(x,t) = y_0 \sin(kx + \omega t).$$

In this case, considering the general solution (1.95), we have that

$$y(x,t) = y_0 \left[\sin(kx - \omega t) + \sin(kx + \omega t)\right] = 2y_0 \sin(kx)\cos(\omega t)$$

then, we can observe that this function cannot properly represent a traveling wave, since the spatial and temporal variables are separated (i.e. we have the product $2y_0 \sin(kx)\cos(\omega t)$). In other words, the argument of the function $y(x,t)$ is not of "traveling" type $(ct \pm x)$. In fact, the function y presents itself as the product of two functions, one dependent only by x, the other dependent only on t.

Wave Equation Solution

The simplest way to obtain this particular situation is to exploit the reflections of a wave that occur in the presence of a discontinuity of the propagation medium, for example, such as a rigid wall that fully reflects the wave.

Considering the spatial variable x, we can see that the function has minimum when

$$x = \frac{n}{k}\pi$$

these points are defined as *nodes*. On the contrary, we have maximum for

$$x = \frac{(2n+1)}{k}\frac{\pi}{2}$$

these points are defined as *antinodes*. Fig. 1.31 shows the trend of the *standing wave* also known as a *stationary wave* due to direct and reflected wave interference.

Wave Equation Solution

To better explain the phenomenon, consider a plucked L-length string, i.e. the string of length L is fixed at both ends (as in a guitar strings or a piano, etc.). So, we generate waves that propagate ending at the fixed ends of the string. At the ends the waves are reflected by reversing the phase: the string becomes a site of progressive and regressive waves that interfere with each other. This situation is illustrated in Fig. 1.32.

The interference, due to the sum of the two waves, can be destructive or cumulative. The only modes that "survive" are called *stationary waves*, also called *normal modes* of vibrating the string. Their characteristics depend on the length L (and the other parameters) of the string.

From the conditions to the string extremes we have that

$$y(x,t)|_{x=0} = 0, \quad \text{and} \quad y(x,t)|_{x=L} = 0$$

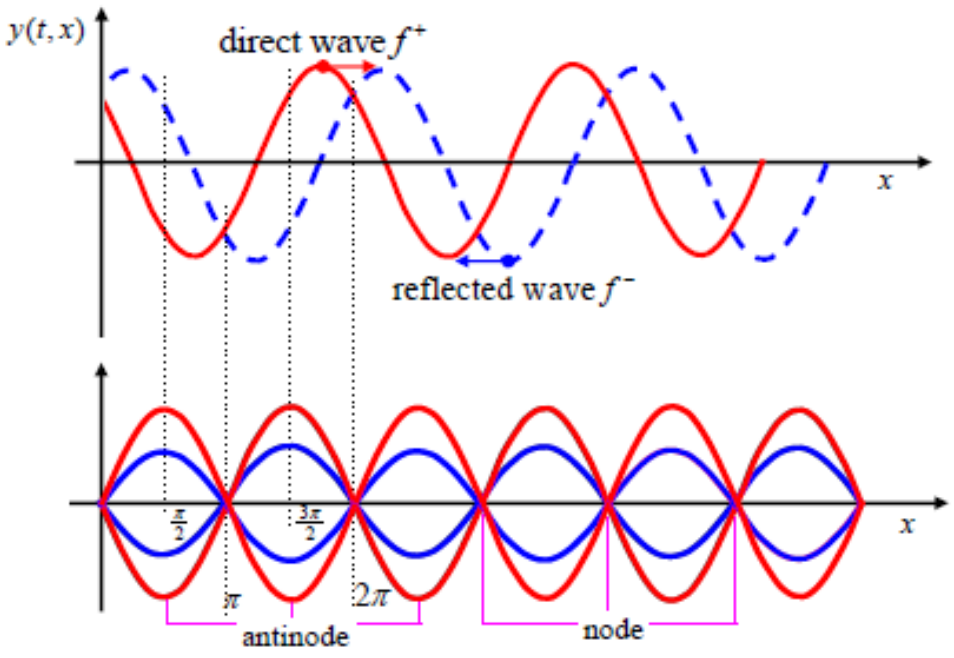

Wave Equation Solution

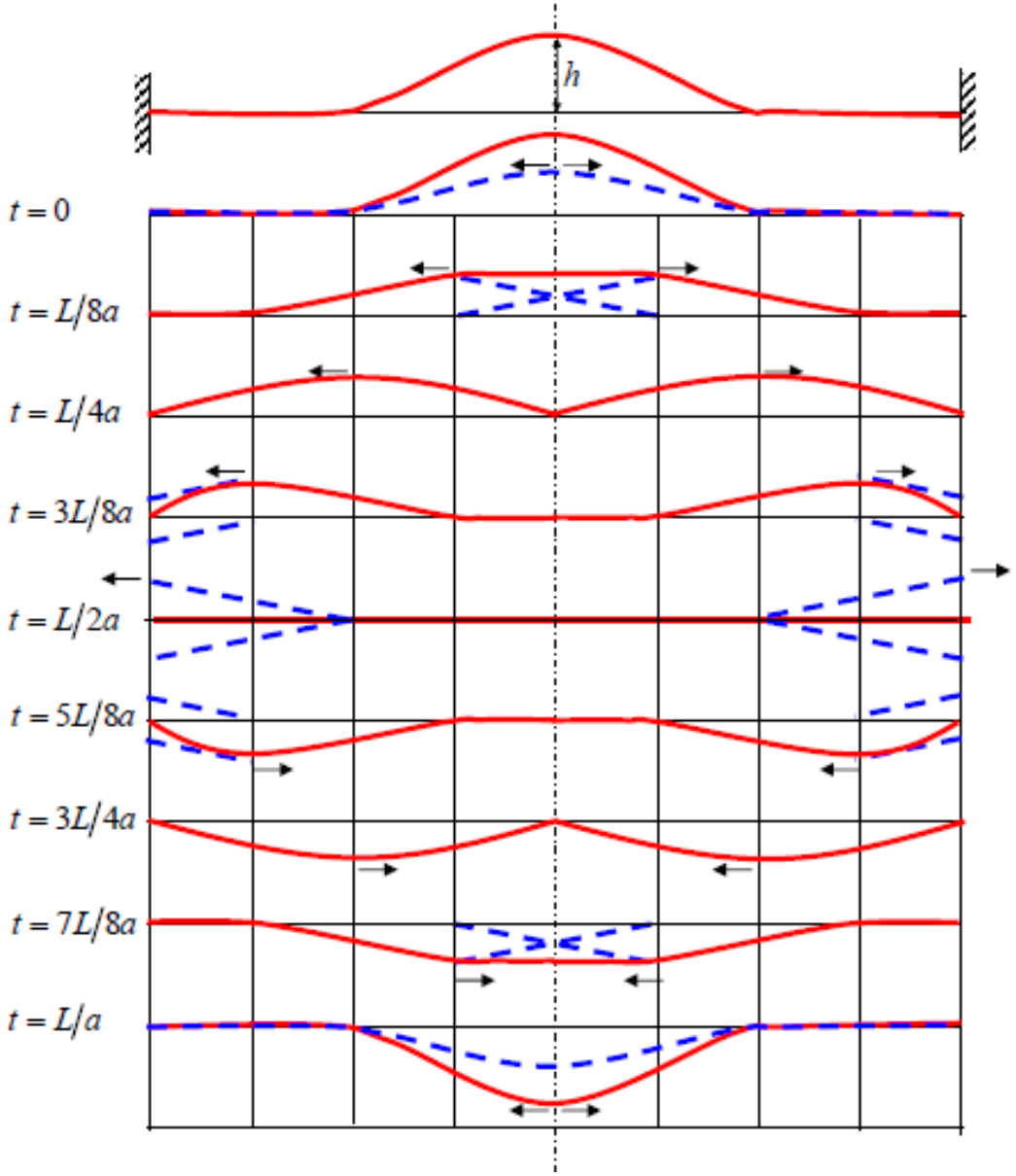

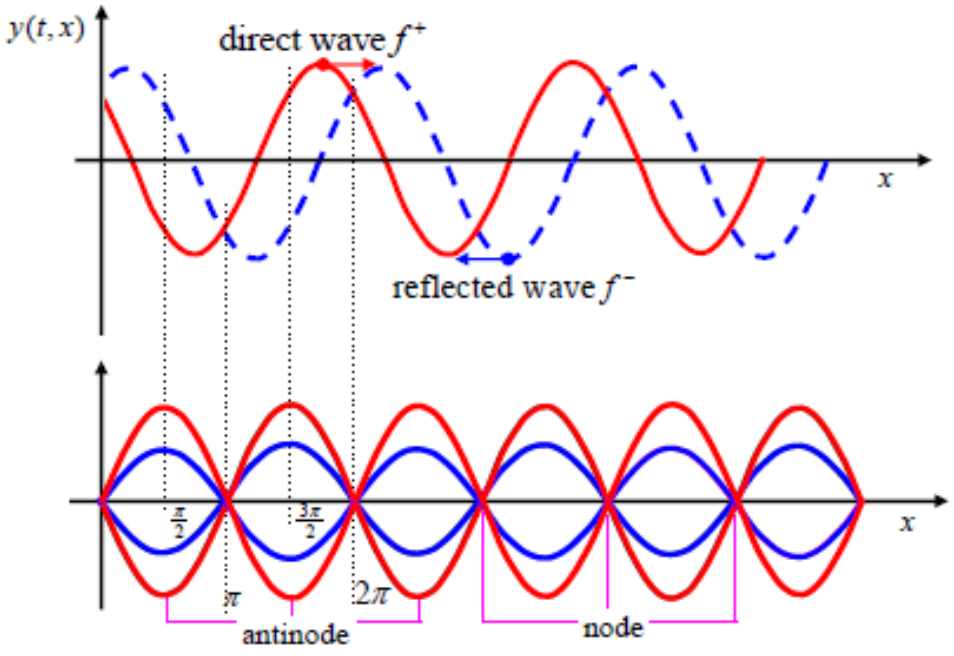

Fig. 1.32 Finite length string with fixed terminations, simultaneously plucked on three points P.

Wave Equation Solution

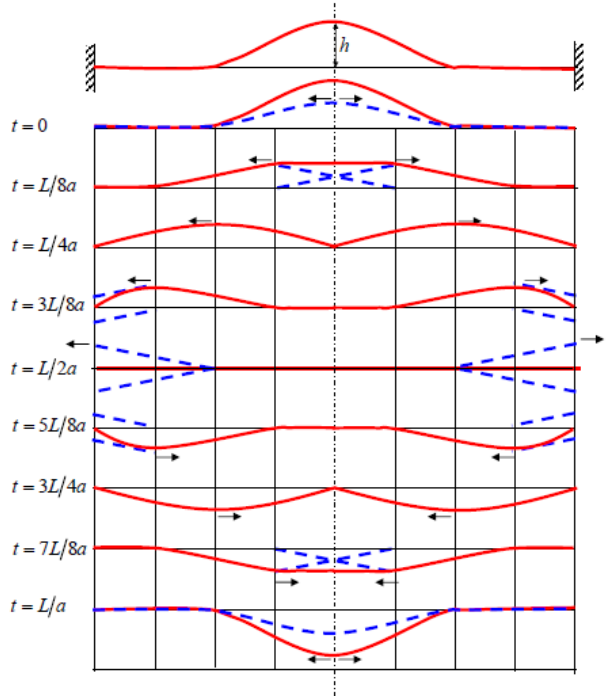

we can easily see that the first condition is automatically satisfied. While for the second one imposes that

$$kL = \frac{2\pi}{\lambda} L = n\pi$$

that is

$$\lambda = \frac{2L}{n}$$

with n positive integer.

If this condition is not met, the interference between the various reflected waves is destructive and the vibration decreases very rapidly. The wavelengths of the normal modes (and therefore the relative frequencies) are not arbitrary, but are related to the length of the string

$$\lambda = 2L, \frac{2}{3}L, \frac{1}{2}L, \ldots$$

The modes are therefore *quantized*. The mode having the maximum wavelength (equal to $2L$), called *fundamental* or *first harmonic*, has nodes only in the extremes. the second mode (second harmonic) has a node in the middle of the string, the third way has two nodes, and so on. So we will have stationary waves on a string fixed at the two ends or in a tube containing air, closed at the ends (see Fig. 1.29).

The waveshape that is established on a string at fixed ends is a linear combination of normal modes. The same is true in the case of a closed tube at the ends, as in many wind instruments.

Stationary Wave

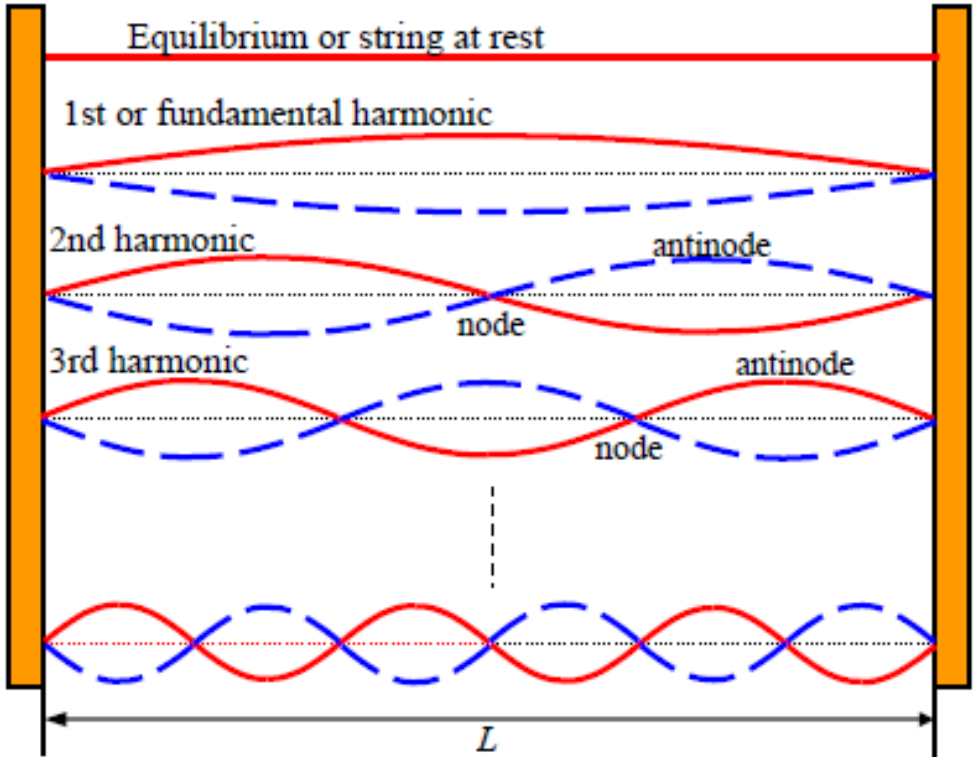

Fig. 1.33 Stationary wave and modes of a stretched string of length L constrained to extremes. Note that, an antinode is spaced from a node by a $\lambda/4$ distance. Also note that for the fundamental mode $\lambda = 2L$, for the 2nd harmonic $\lambda = L$, for the 3rd harmonic $\lambda = 2L/3$, and so on.

Remark 1.11. Observe that, this phenomenon can be exploited for the construction of musical instruments. From the acoustic-musical point of view, it can allow to generate a "rich in harmonics" timbre, that depends on the characteristics of the string, or from the shape of tube section. In addition, by changing the length L of the string (or tube in the case of wind instruments) we can define the various vibration frequencies (or fundamental-mode). In other words, as for a harp, a piano, a trumpet, a clarinet, and son on, by varying the length of the string (or of the air column), we can define the various tonal range of the instrument.

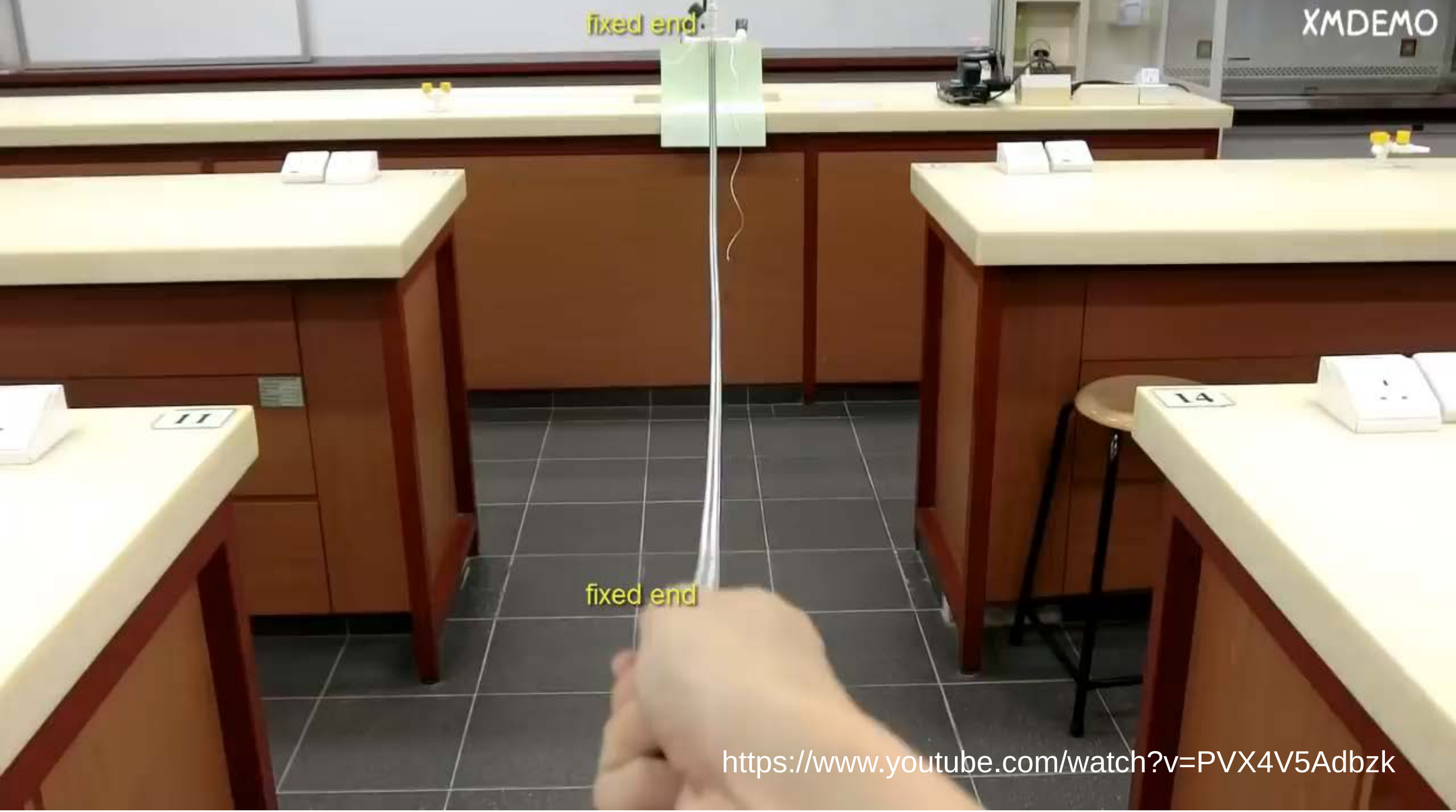
fixed end
XMDEMO
fixed end
https://www.youtube.com/watch?v=PVX4V5Adbzk

Strings Vibration and Musical Scales

The most common way to produce sounds is to use vibrating strings. In fact, by varying the length of the string, with the same tension and mass-density, there is a variation in the frequency of the sound emitted. Between the frequency and length of the string there is a relationship of inverse proportionality: long string, heavy note (bass tones); short string, sharp note (high tones).

1.6.3.1 Natural Musical Scales

Consider a L length string tied to its extremes. In case the string is plucked in such a way as to excite the only fundamental mode, the resulting vibration would have a wavelength equal to twice its length (see Fig. 1.34). In fact, considering the relation $\lambda = c/f$ the frequency of the emitted sound would depend on the tension, on the mass-density and on the length L according to the following law

$$f_0 = \frac{K/\mu}{2L}. \tag{1.104}$$

From the above, then, if a string of length L emits the C (or in Italian notation Do) note which we suppose to be the reference, the same string of length $L/2$ sounds at double frequency and emits a C to the higher octave (i.e. C2). The length $L/3$ gives a G2 (i.e. of an octave superior). Wanting to generate a G of the same octave of the C of reference enough to take a double length $2L/3$. Again a string length $L/4$ generate

Strings Vibration and Musical Scales

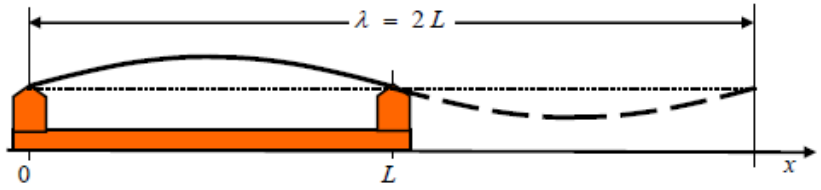

Fig. 1.34 Fundamental mode or 1st harmonic where $\lambda = 2L$.

a 3C sound, i.e. two octaves above the reference, a string length $L/5$ generate an E sound and so on.

Fig. 1.35 shows the link between the length of the string and the frequency of the sound emitted for some notes. For example, if the string at the top vibrates at a frequency corresponding to the musical note C, it can be seen that by decreasing its length the pitch of the sound increases.

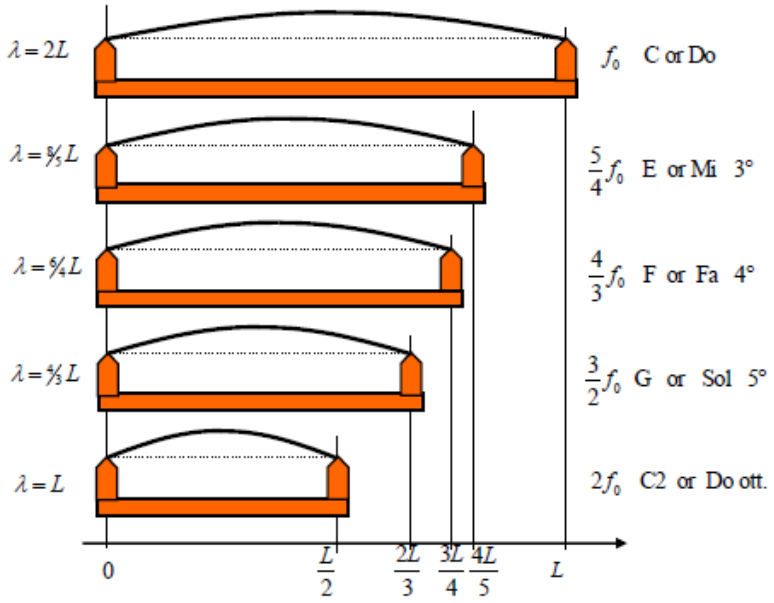

Fig. 1.35 Frequencies of the fundamental mode, and example of musical note, for a string of variable length.

Strings Vibration and Musical Scales

In the past, however, Pythagoras and his pupils realized that by dividing a string according to ratio composed of small numbers and making it vibrate, harmonic sounds were obtained. With the Pythagorean approach the notes are defined as ratios between the lengths of the string that generates the sound.

The Western musical tradition has assigned a special role to some frequencies, or rather to a sequence of relationships between frequencies (or between the lengths of the strings that generate them). The frequency of the notes that derive from this approach is called a *natural scale*. The natural scale has been so named, because it is based on a physical phenomenon: the succession of harmonic sounds. The natural scale is made up of seven fundamental notes: C, D, E, F, G, A, B. If f is the frequency (in hertz) of the fundamental note C, the frequency of the others can be obtained by considering the relationships between lengths of a string. Taking as a reference the note C, for simplicity, assign the frequency normalized to 1, the relative frequencies of the intervals are shown in Fig. 1.36-a).

The musical scale is enriched with other notes introducing the *sharp* and *flat* changes between two successive notes, except between the E and the F and between the B and the C of the upper octave.

Strings Vibration and Musical Scales

In the natural scale, it is said *sharp* (indicated with the symbol "#") the note with an interval of 25/24 higher than the reference note. While, we say *flat* (indicated with the symbol "b") the note at the interval 24/25, lower than the reference.

Remark 1.12. Observe that, in the natural scale, the intervals between the notes are not all the same and only some musical instruments, such as the violin, allow to produce all the notes of the natural scale (not the keyboard instruments).

The determination of the frequencies of the notes can be done in the following way. Starting from note B, you get the other notes going up from fifth to fifth (a fifth corresponds to an interval of three tones plus a semitone: see Fig. 1.36-a)) finding F#, C# etc. Then starting from the F and descending from fifth to fifth, we find Bb, Eb etc. Realizing the stairs in this way it happens that the C# and the Db, for example, do not coincide.

Strings Vibration and Musical Scales

1.6.3.2 Temperated Music Scale

To simplify the notation, and to avoid the inconveniences of the natural scale, at the end of 1600, Andreas Werckmeister (later followed by J. Sebastian Bach) introduced the *temperate scale*. In the temperate scale, also called equalized-scale, the intervals of two successive notes are always the same.

The mathematical construction of this scale is based on the general formula $2^{k/N}$ (with k e N positive integers), where N represents the total number of intervals or semitones of the scale and $k \in [0, N-1]$ represents the distance in semitones with respect to the note taken as reference (in musical language the reference is said first degree). With this definition two notes of frequency f_n and f_{n+1} has one semitone distance their ratio (in frequency) is $f_{n+1}/f_n = 2^{1/N}$ or, in general, we have

$$\frac{f_{n+k}}{f_n} = 2^{\frac{k}{N}}.$$

In the twelve-tone scale the octave is subdivided into twelve semitones for which $N = 12$; that is, two notes have a semitone distance if $f_{n+1} = f_n 2^{1/12}$. Starting from a reference note (for example the a a $f_0 = 440$ Hz) it is possible to obtain the frequency of the distant k-semitones as $f_k = f_0 2^{k/12}$.

In Fig. (1.36)-b), are shown the relative frequencies of the tempered musical scale. Observe that the frequencies of the natural and temperate scale are not exactly the same.

Vibrating rectangular membrane

Vibrating circular membrane

Longitudinal Wave

Sources separation - 3 Spline-Neurons

reverberating environment

(6x5x3.5) [m] T60=200ms Fs = 16kHz

Each microphone acquires all signals in the room.

Problem:
Saparate alla sources

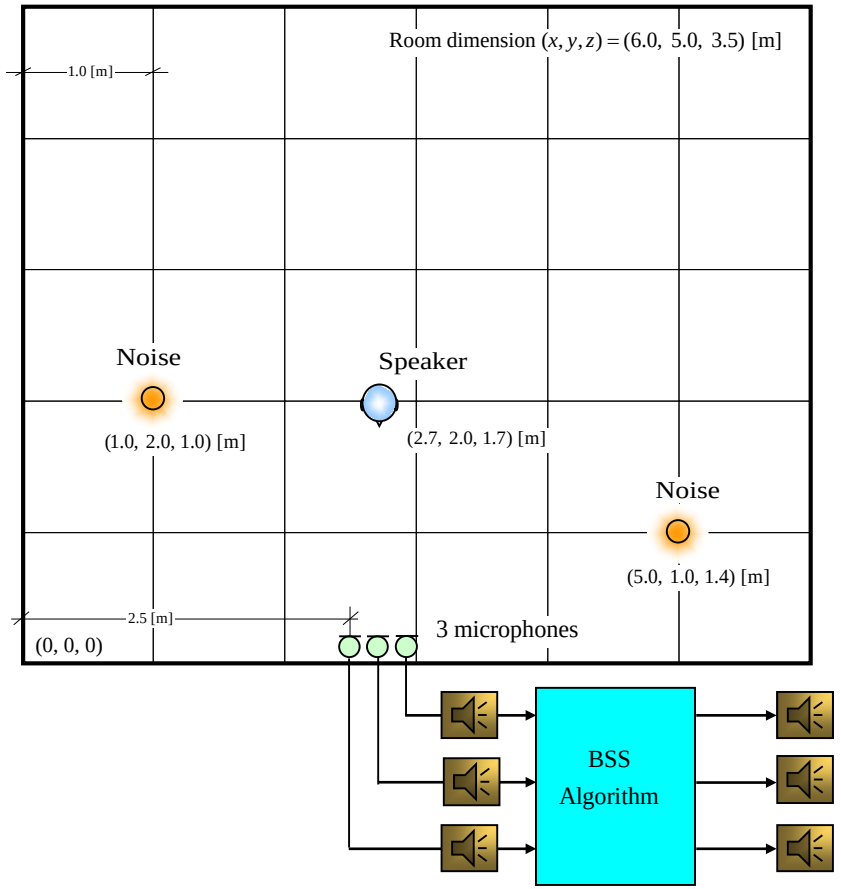

Research area::
Machine Learning for Signal Processing (MLSP)

Indipendent Component Analysis (ICA)

Welcome aboard Neural Networks course

- For other informations

  http://www.uncini.com/dida/NN/index.html